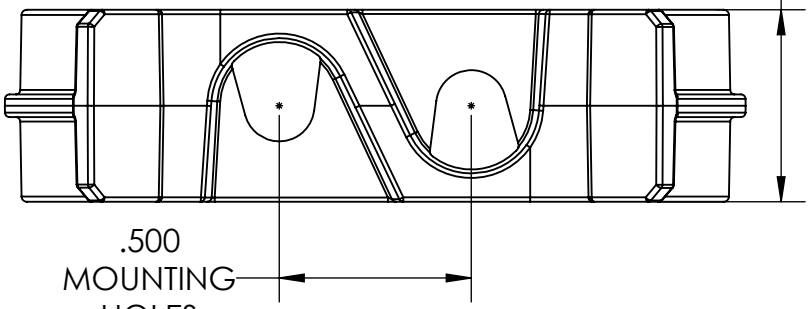

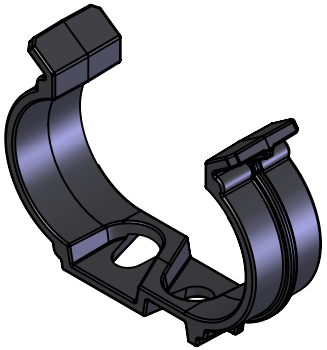

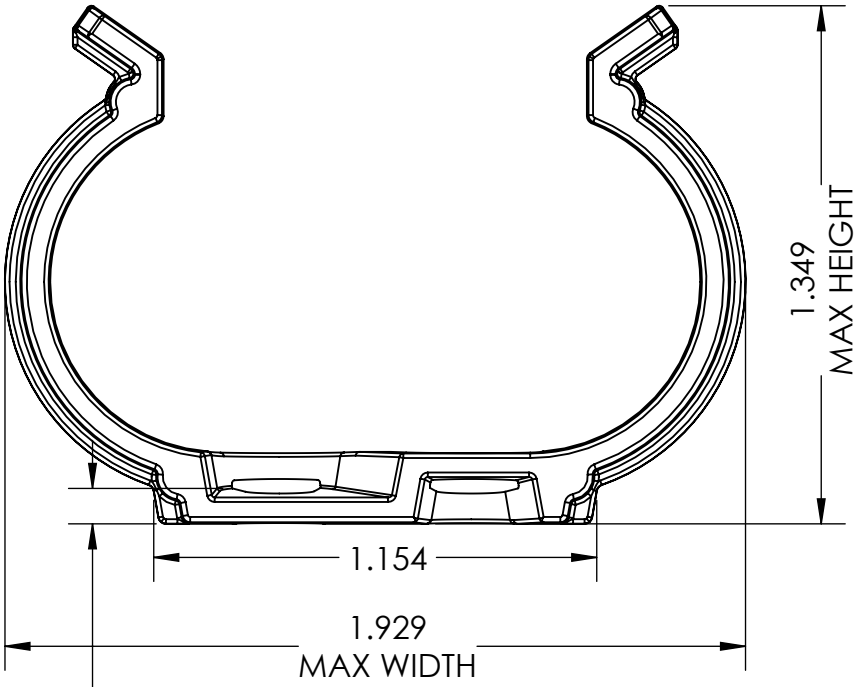

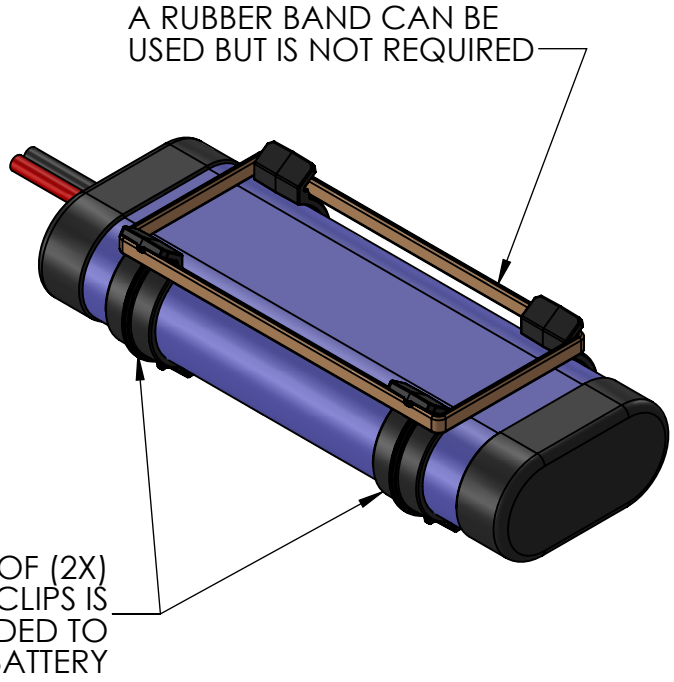

VEX EDR	Description	Battery Clip	
	Dwg No	276-4042-001 - DRAWING 20150429	
	Project	EDR	Sheet 1 of 1
	Release	4/29/2015	**ALL DIMENSIONS ARE IN INCHES.**

www.VEXROBOTICS.com