VEX IQ

3D Build Instructions

Speed Build 2.0

Copyright © 2025. All Rights Reserved.
VEX Robotics, Inc. is a subsidiary of Innovation First International, Inc.

Beams & Plates

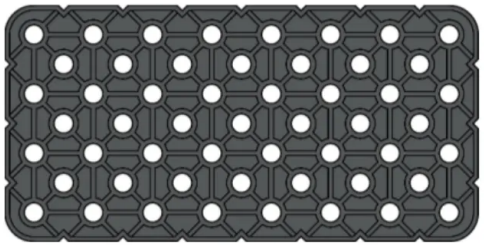

2x 4x8 Beam

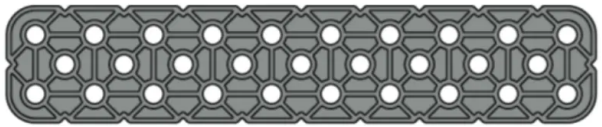

1x 2x10 Beam

Wheels

2x 200mm Travel Wheel

2x 200mm Travel Omni-Directional Wheel

Electronics

1x IQ Robot Brain

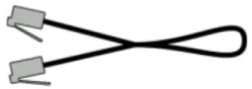

1x 200mm Smart Cable

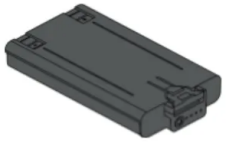

1x IQ Robot Battery

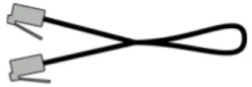

1x 300mm Smart Cable

2x IQ Smart Motor

Shafts

2x 0.25x Pitch Shaft Spacer

4x Rubber Shaft Collar

2x 2x Pitch Motor Shaft

2x 3x Pitch Motor Shaft

Connectors

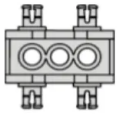

2x Double 2x Wide, 1x2 Corner Connector

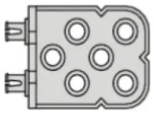

2x 2x Wide, 2x2 Offset Corner Connector

Pins & Standoffs

4x 1x Pitch Standoff

12x 1x1 Connector Pin

3

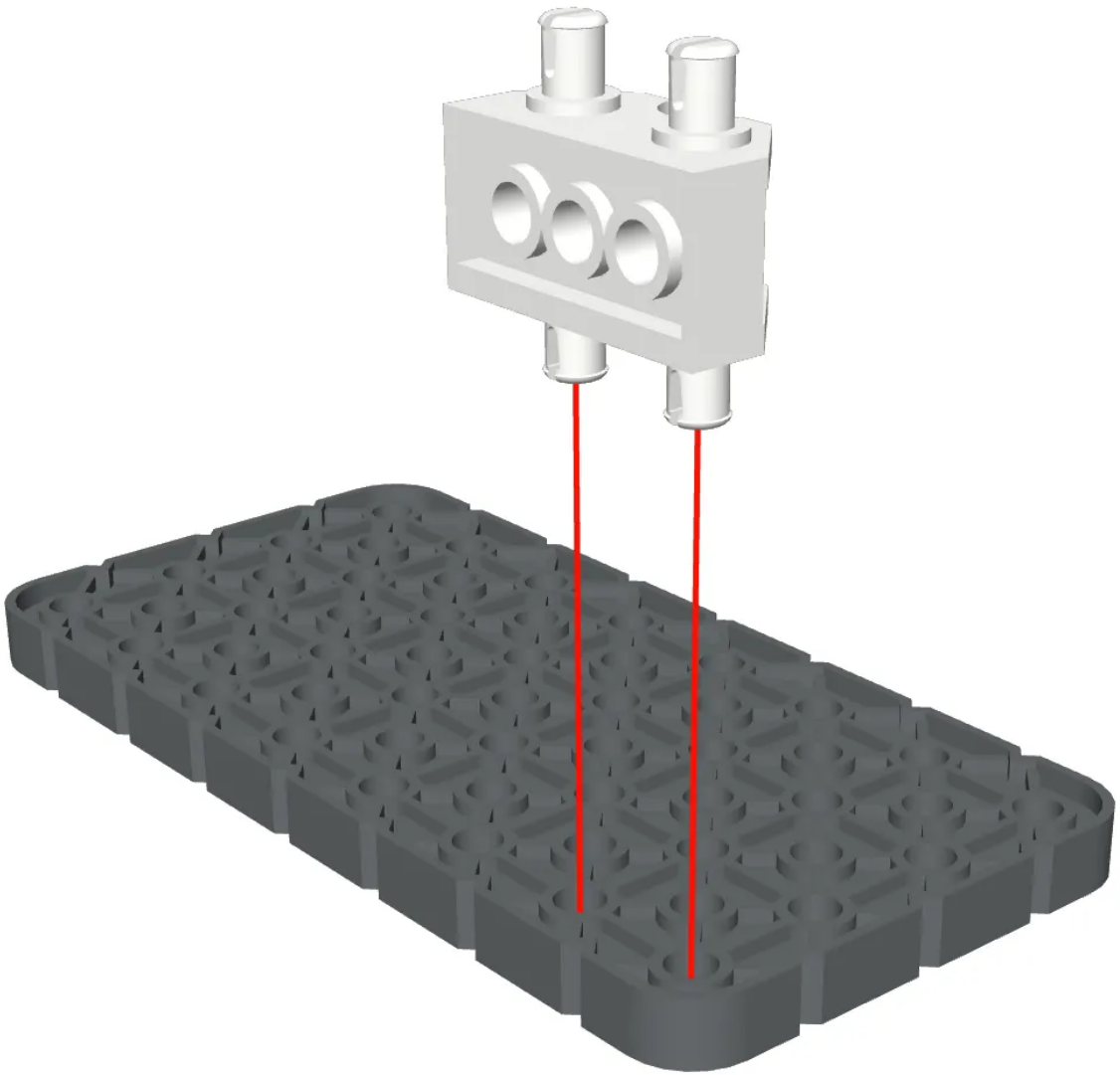

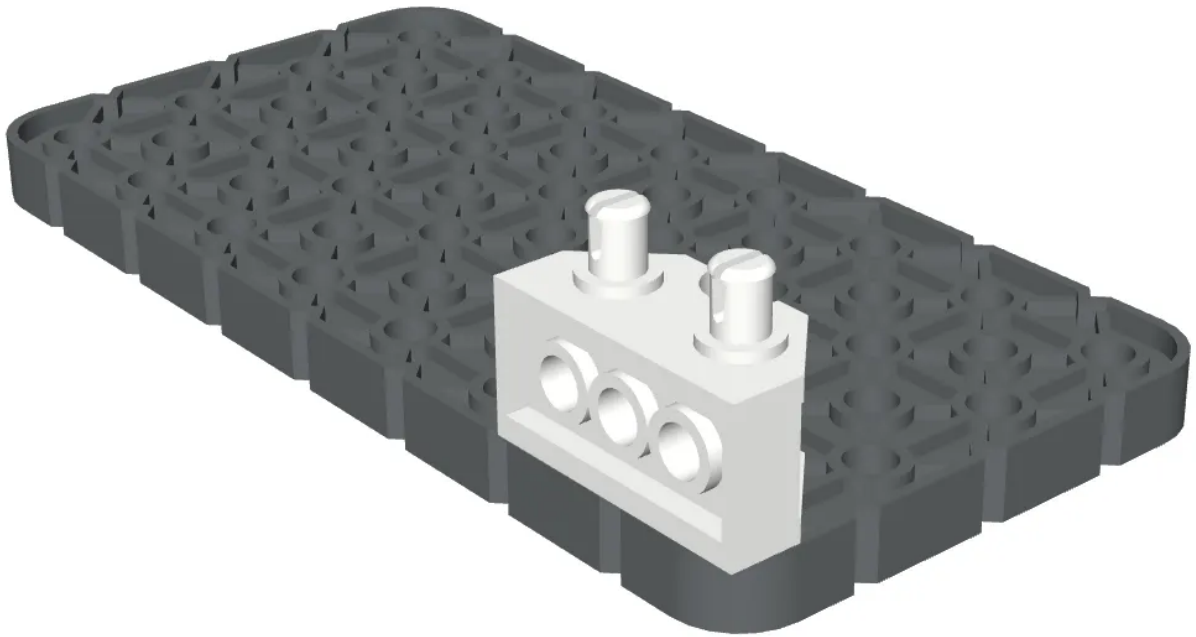

5

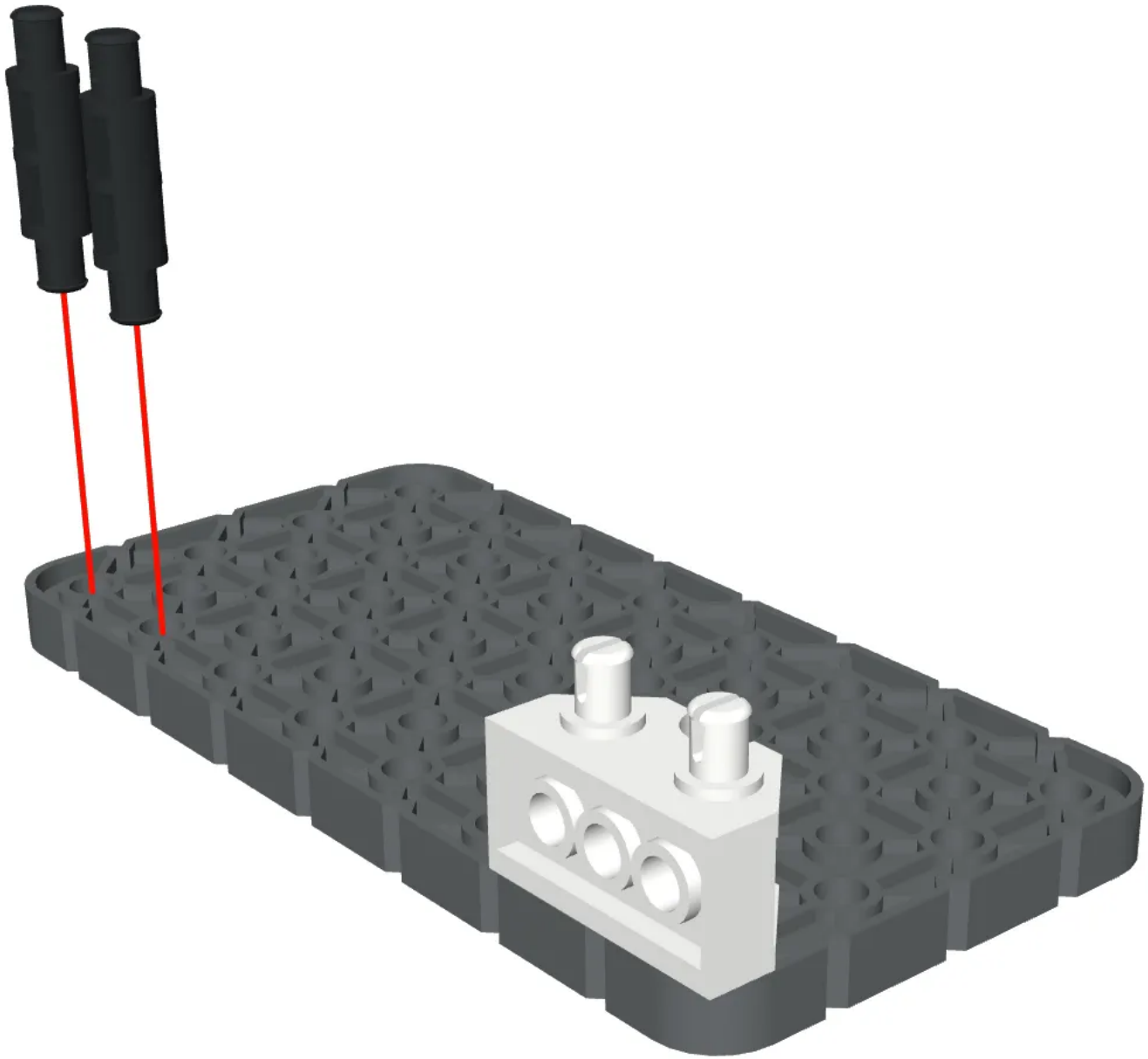

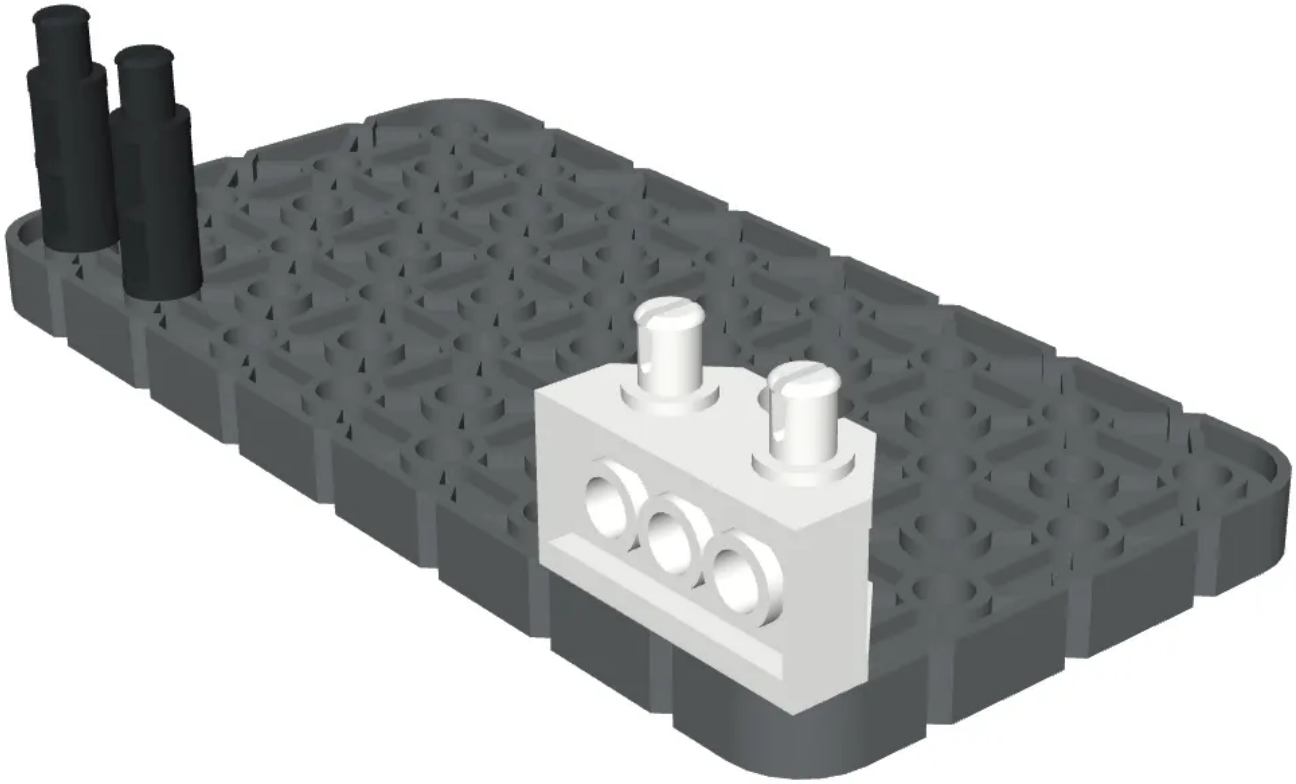

7

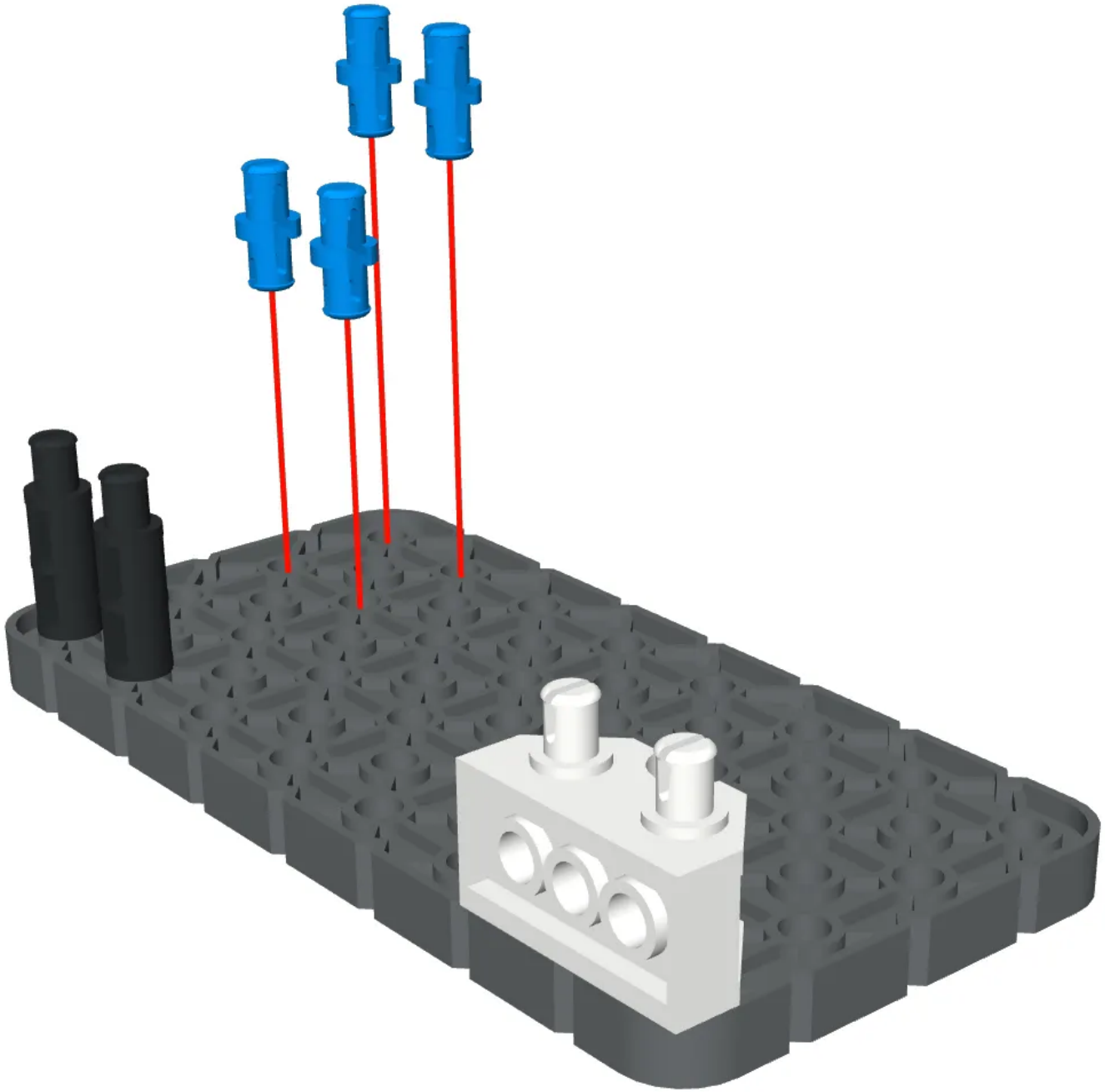

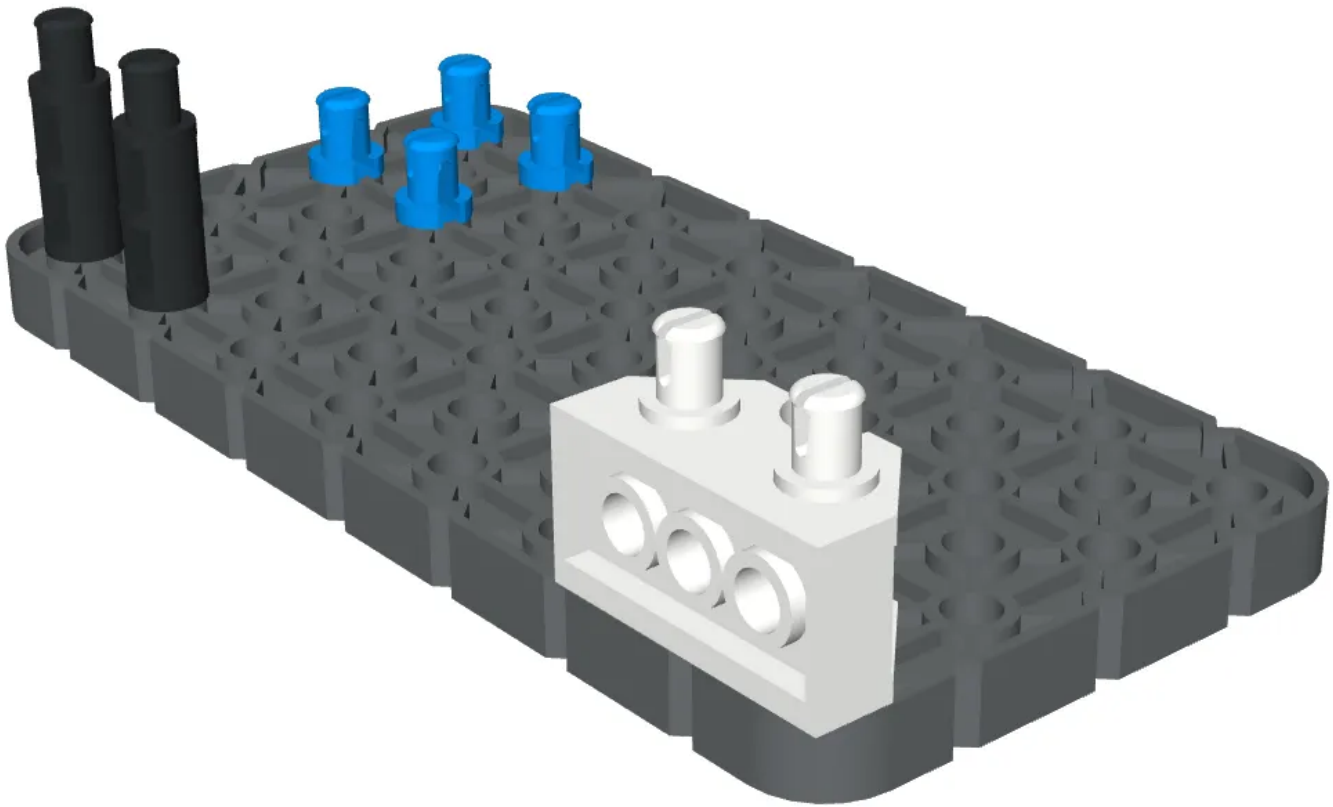

9

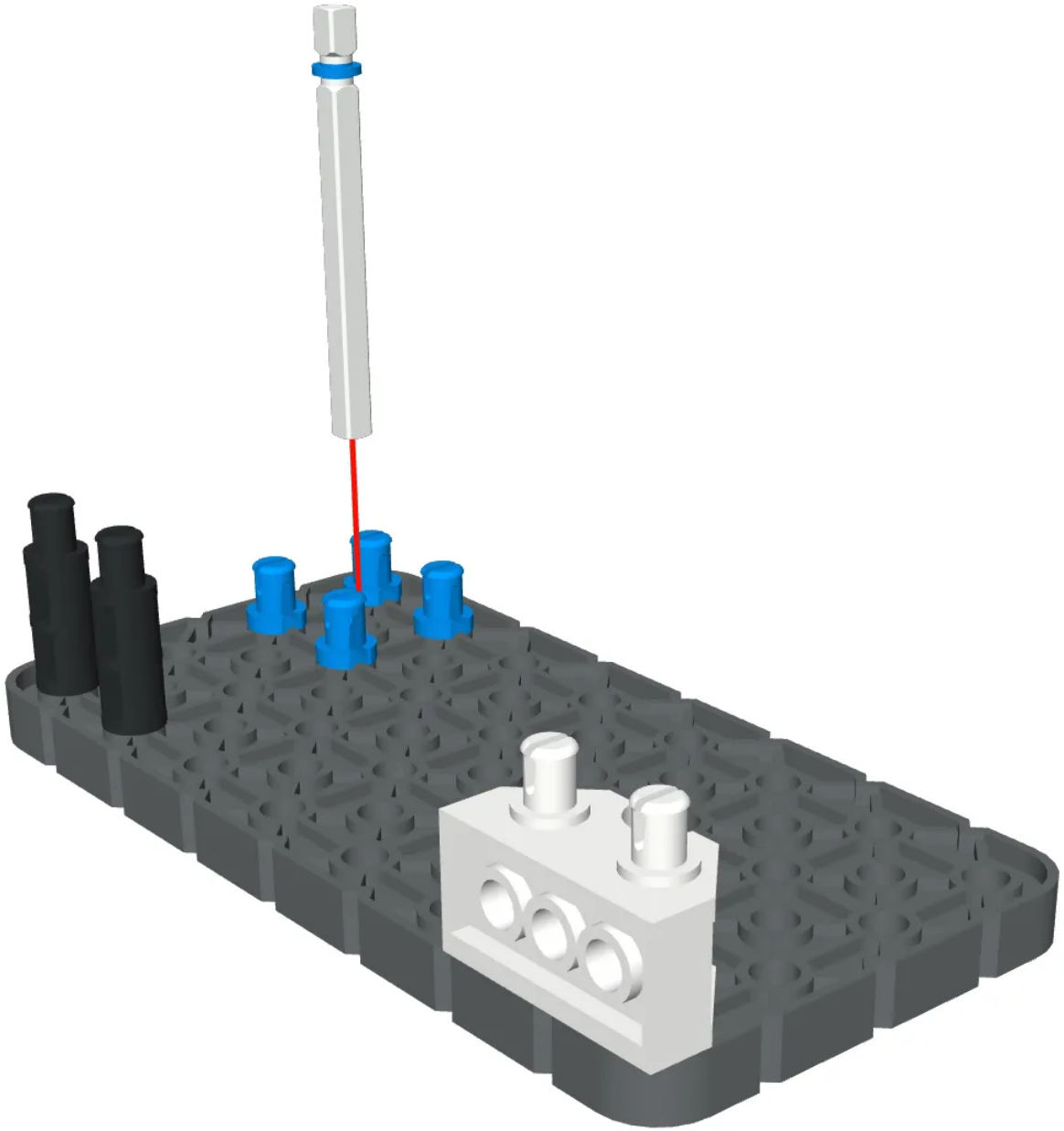

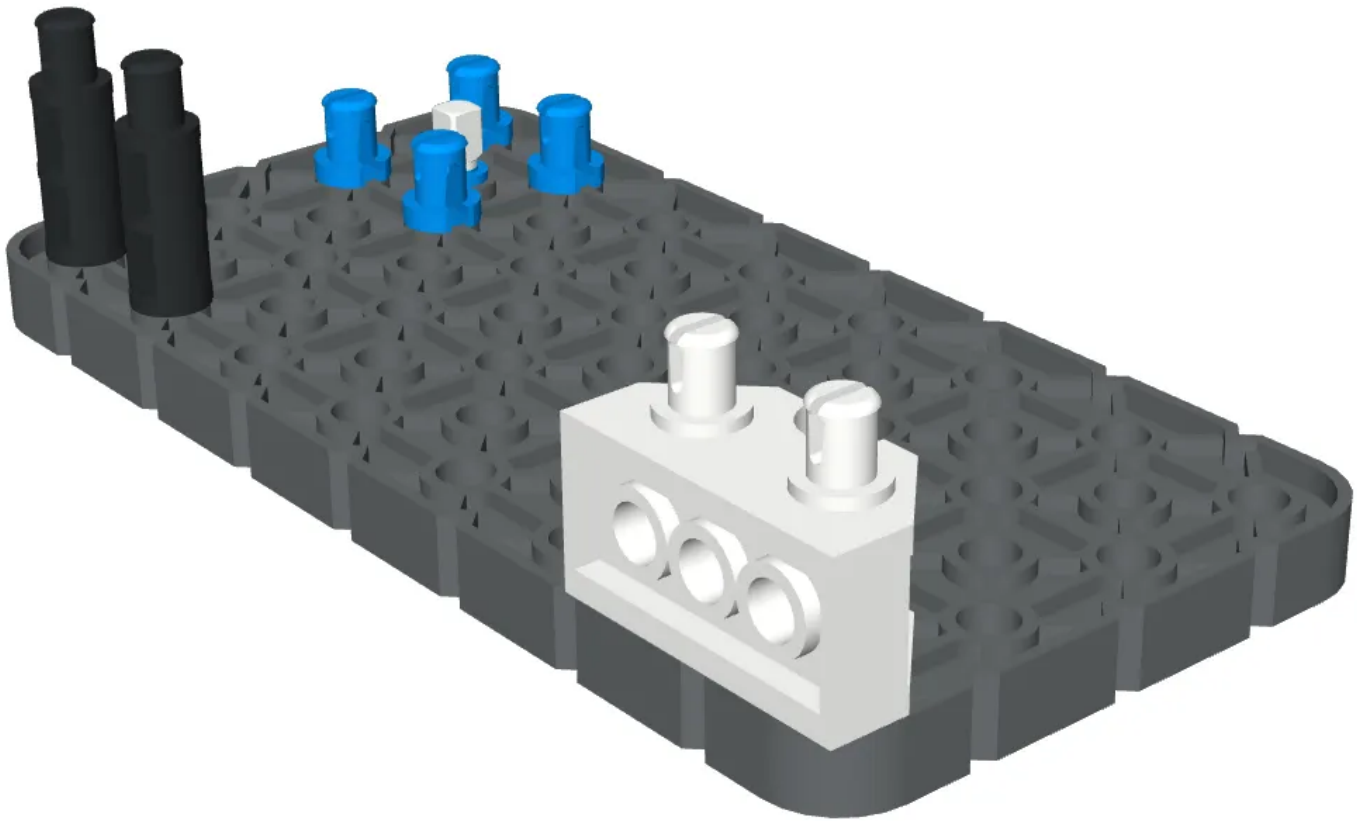

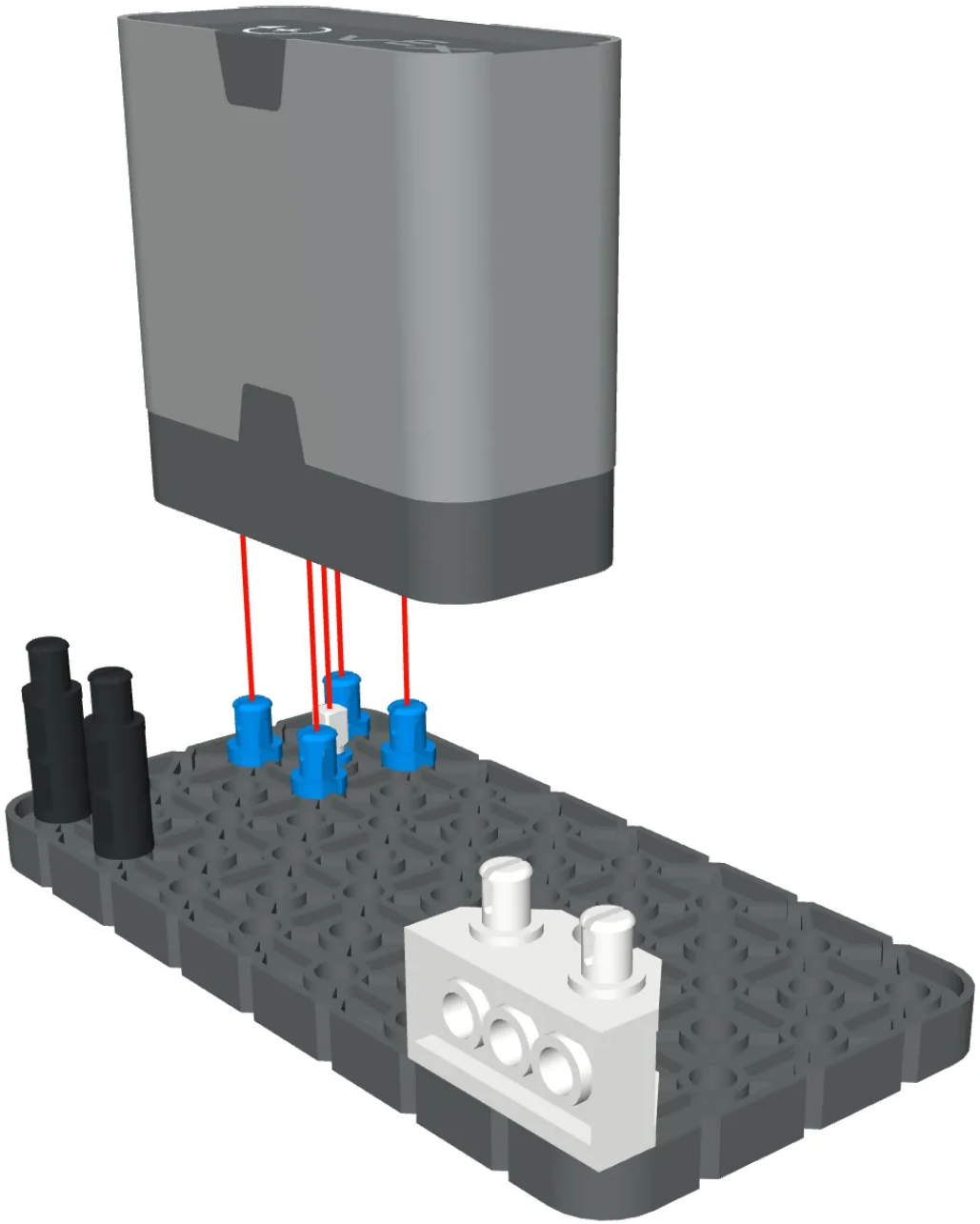

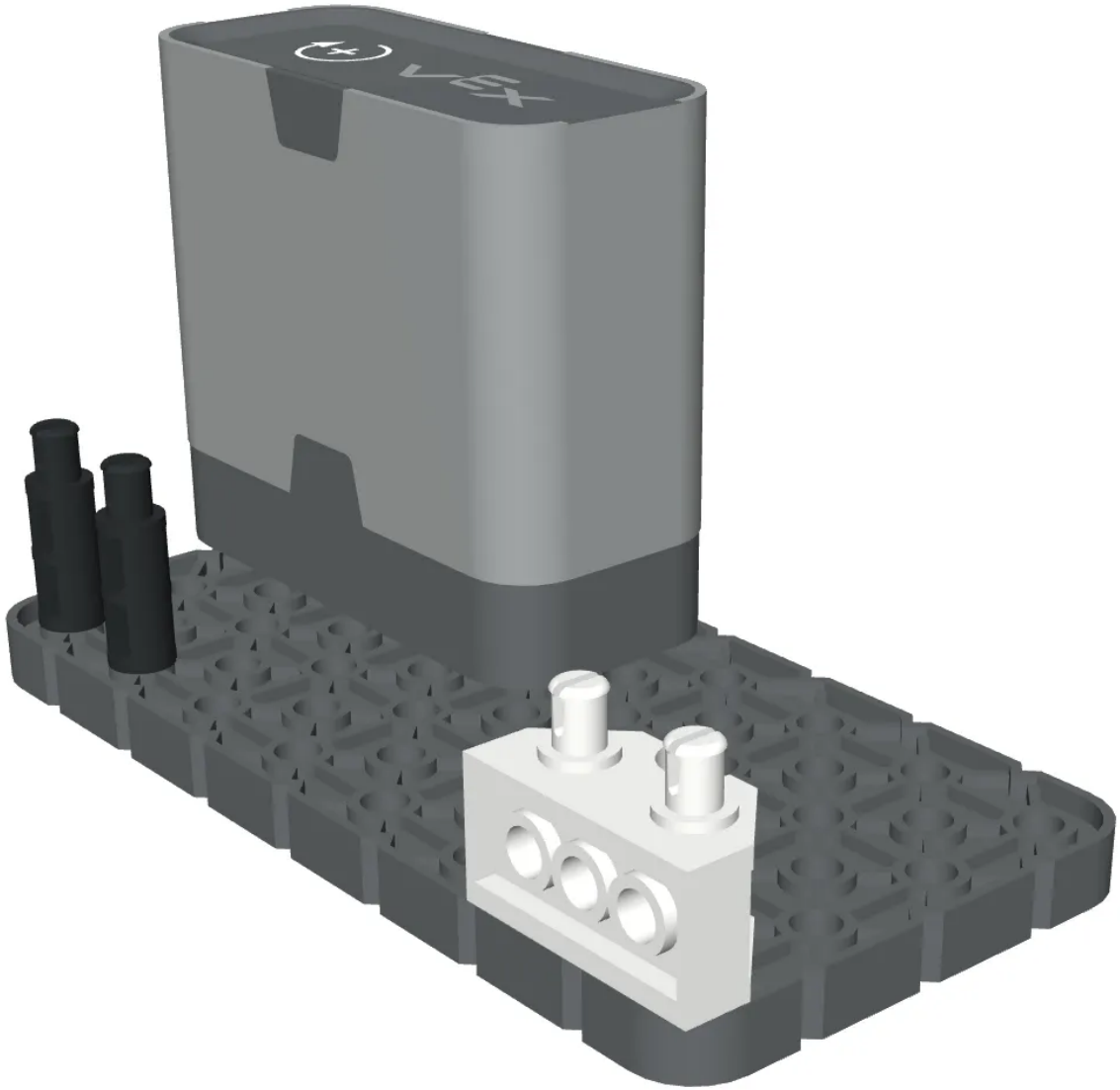
VEX

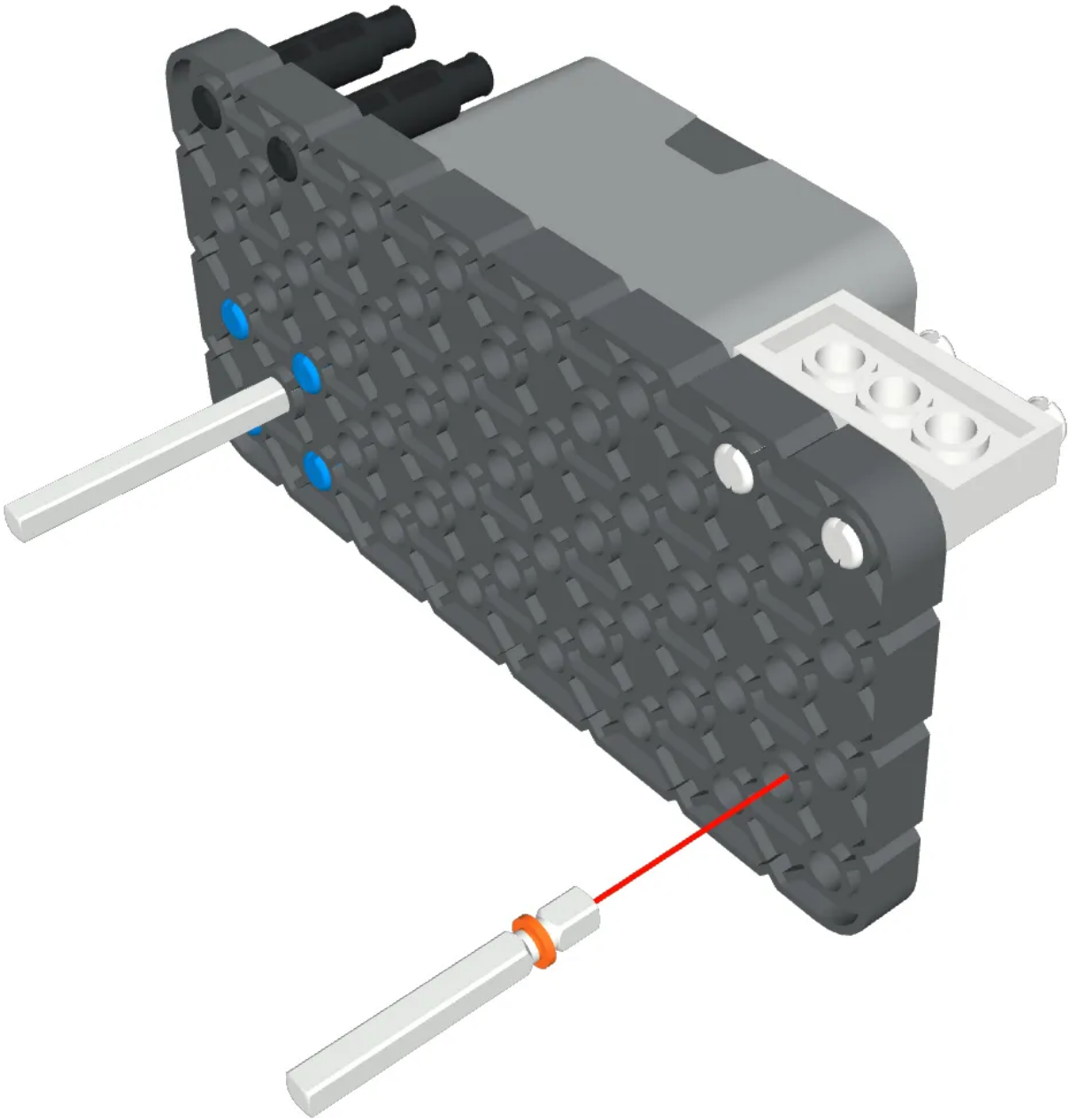

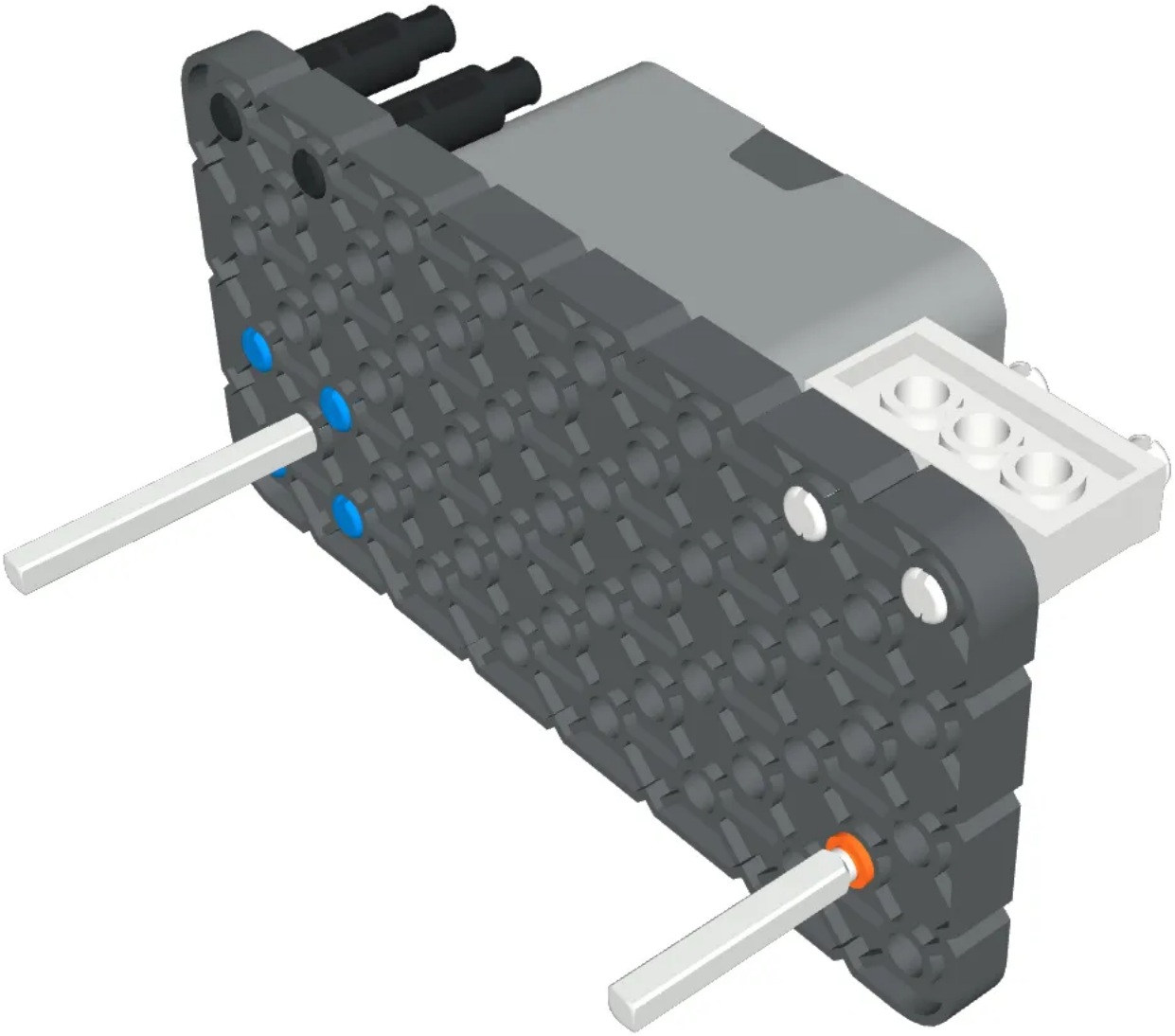

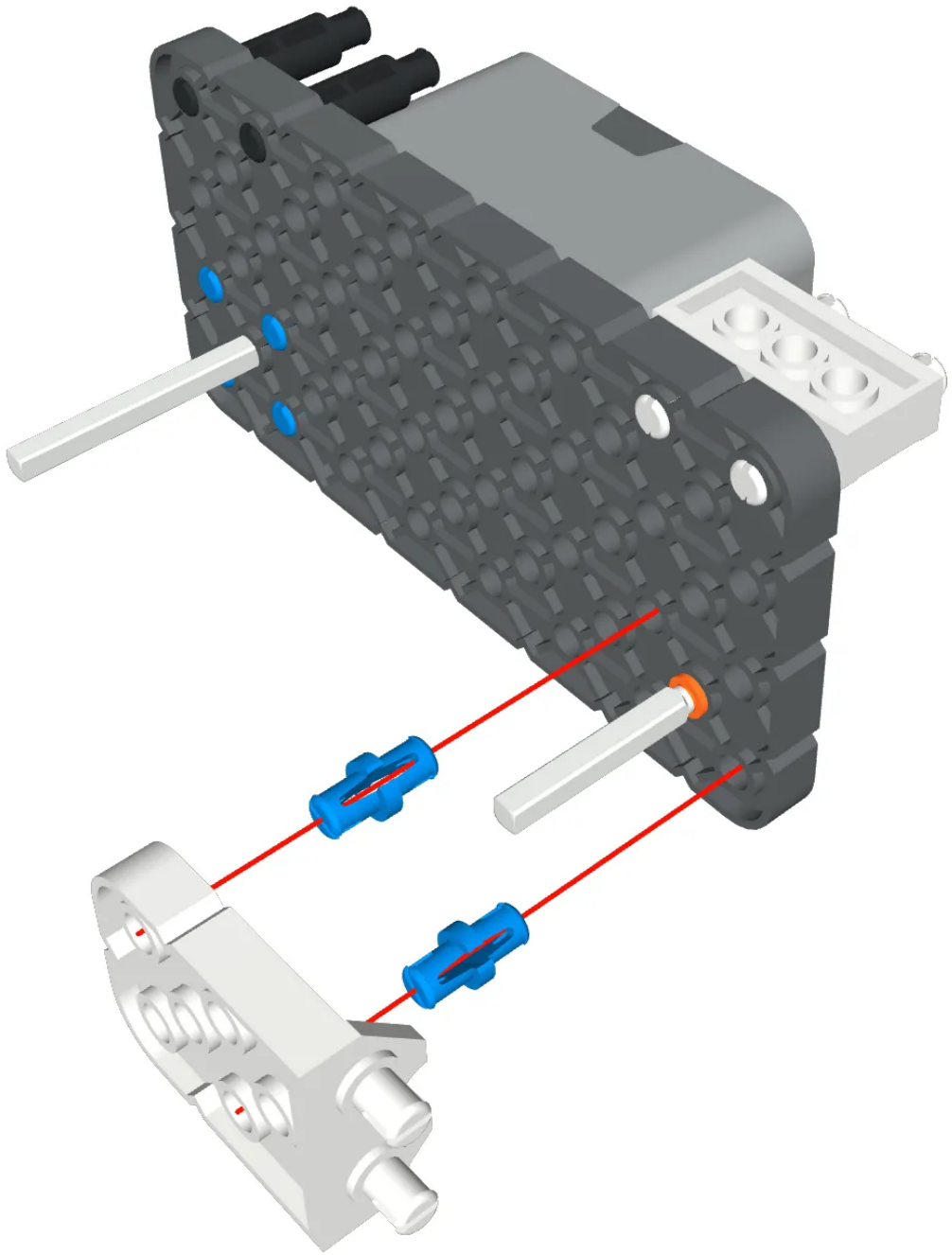

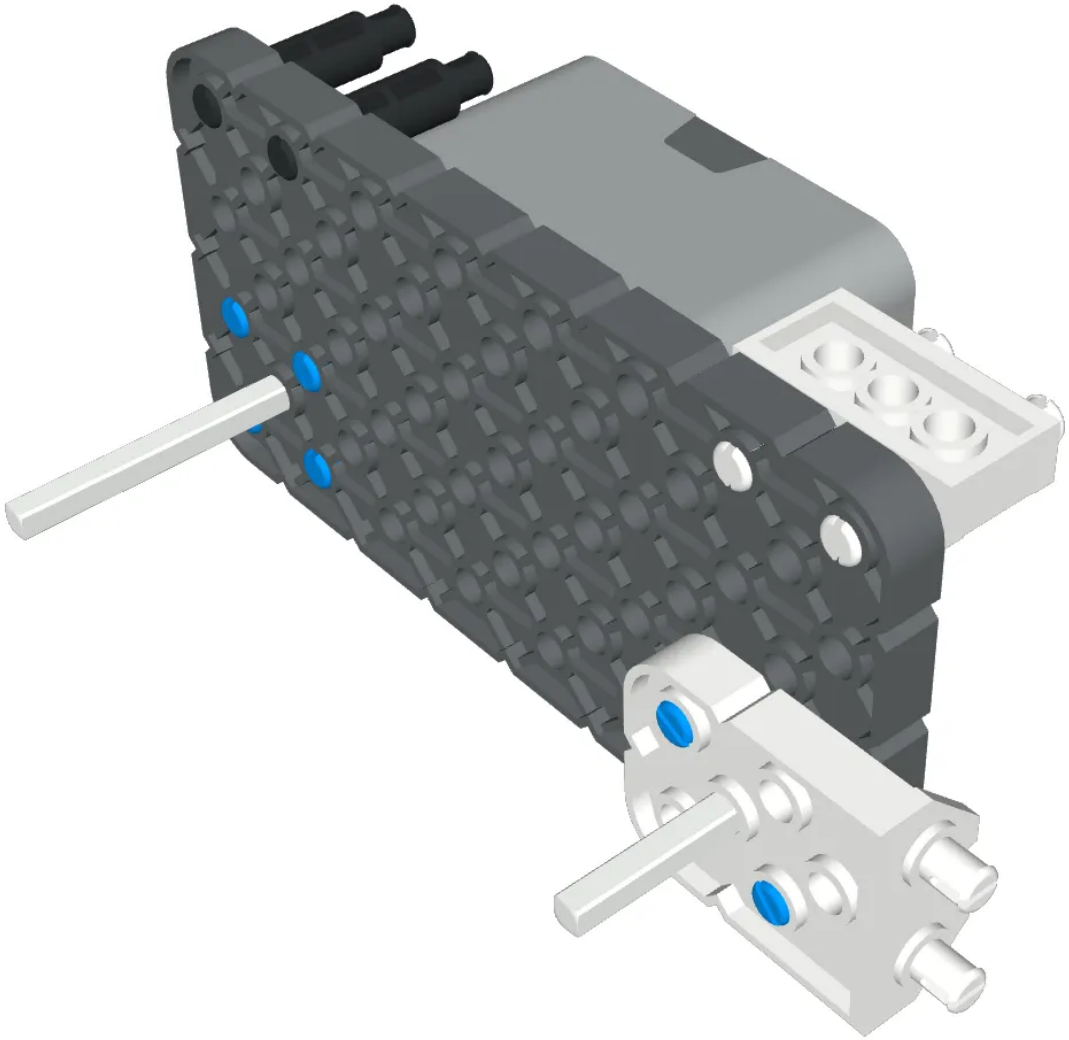

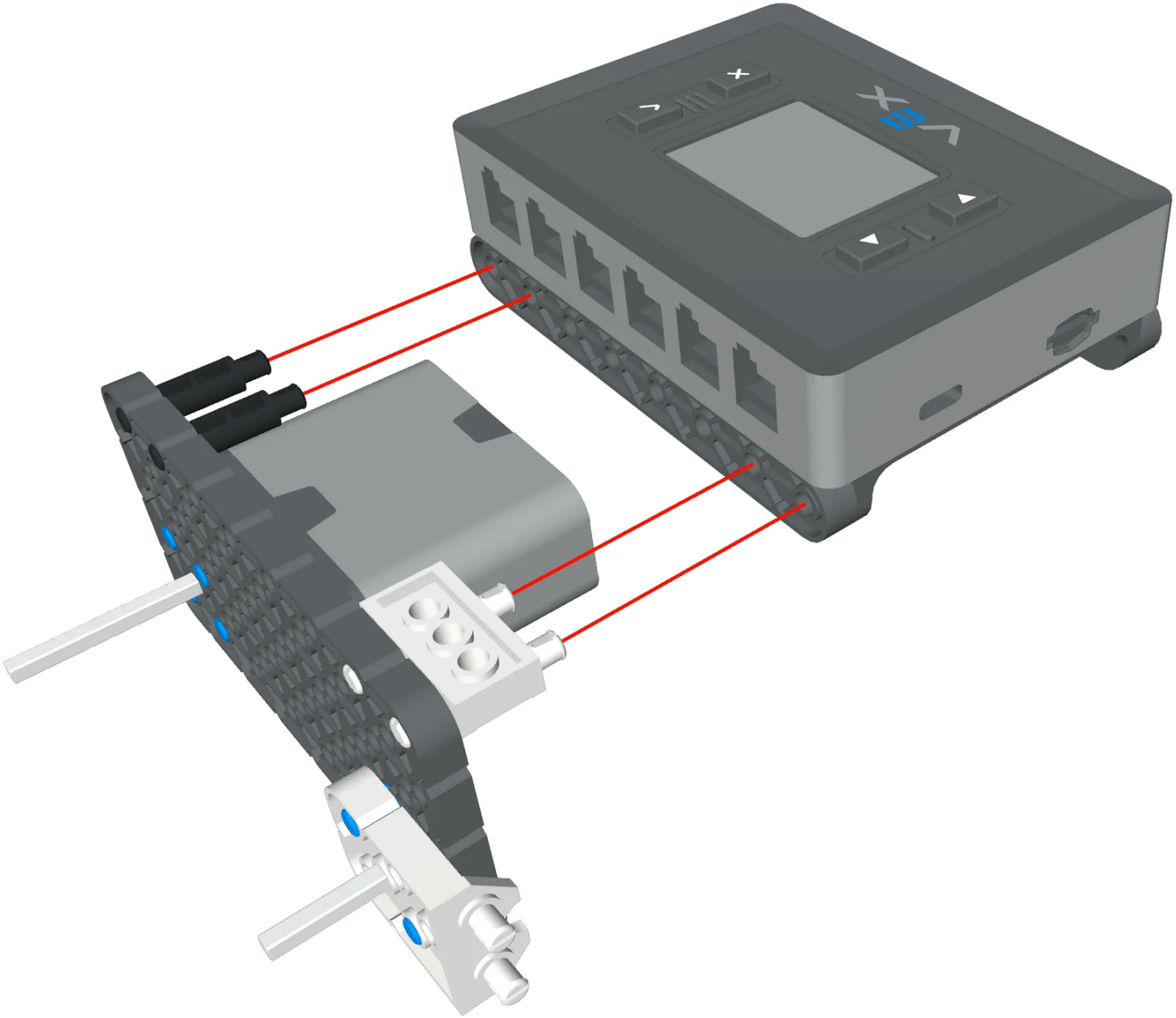

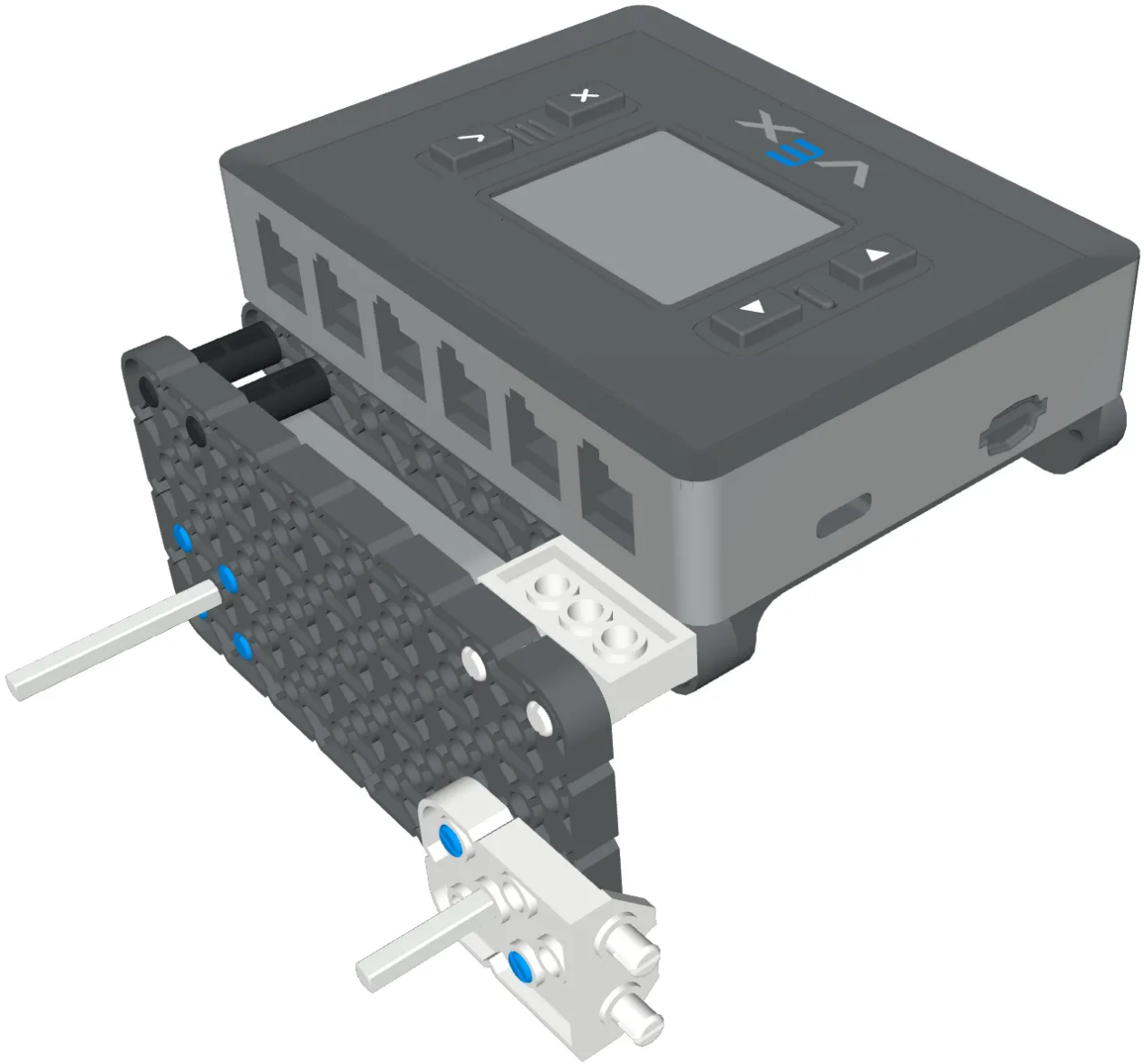
VEX

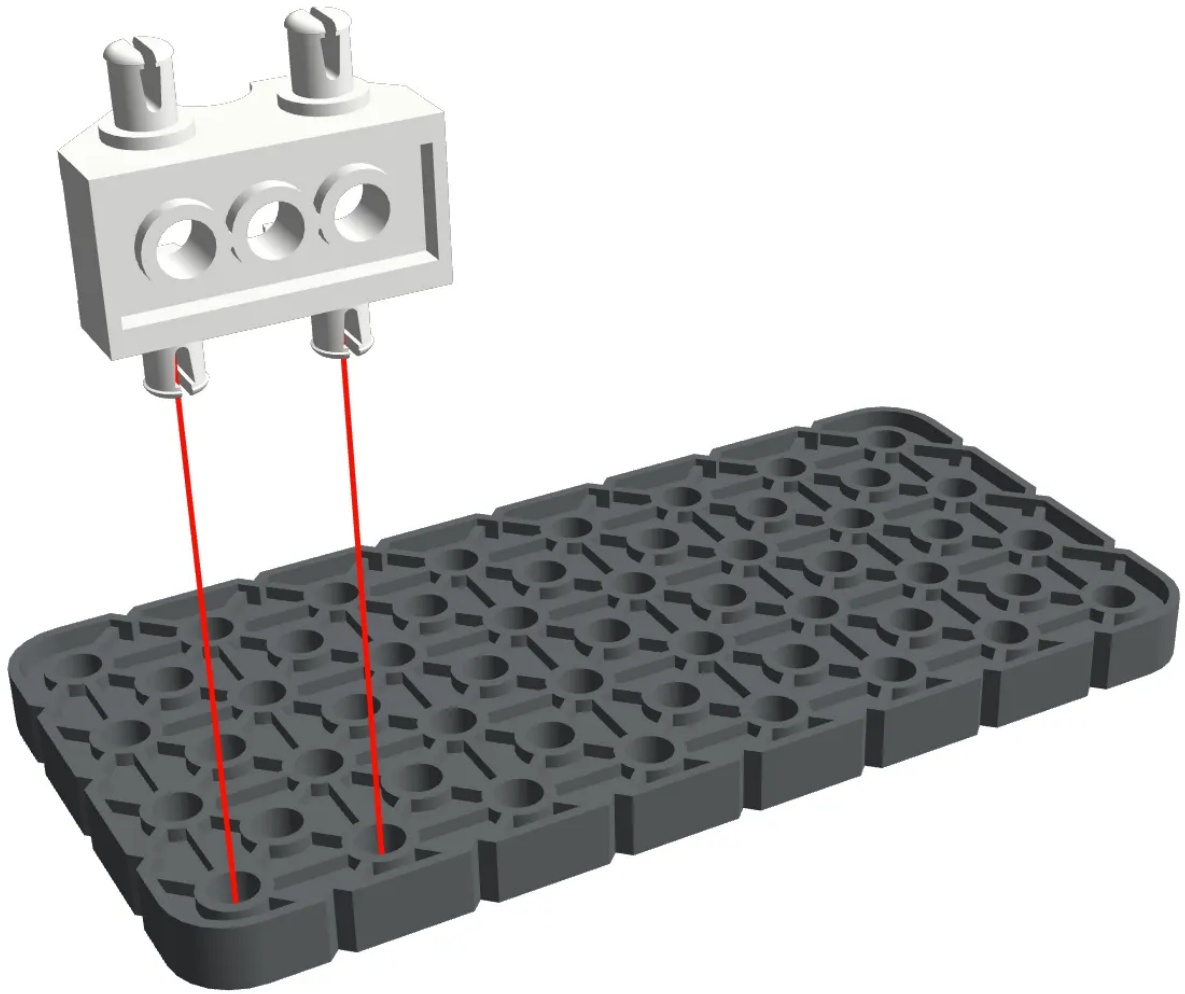

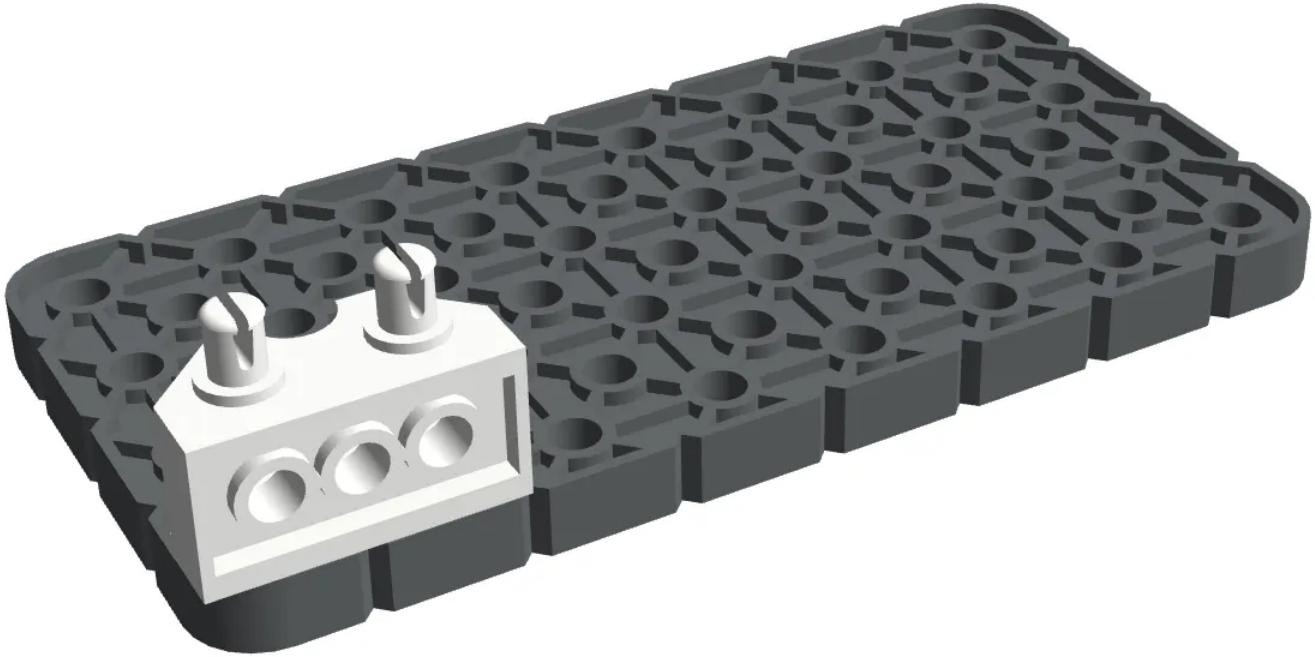

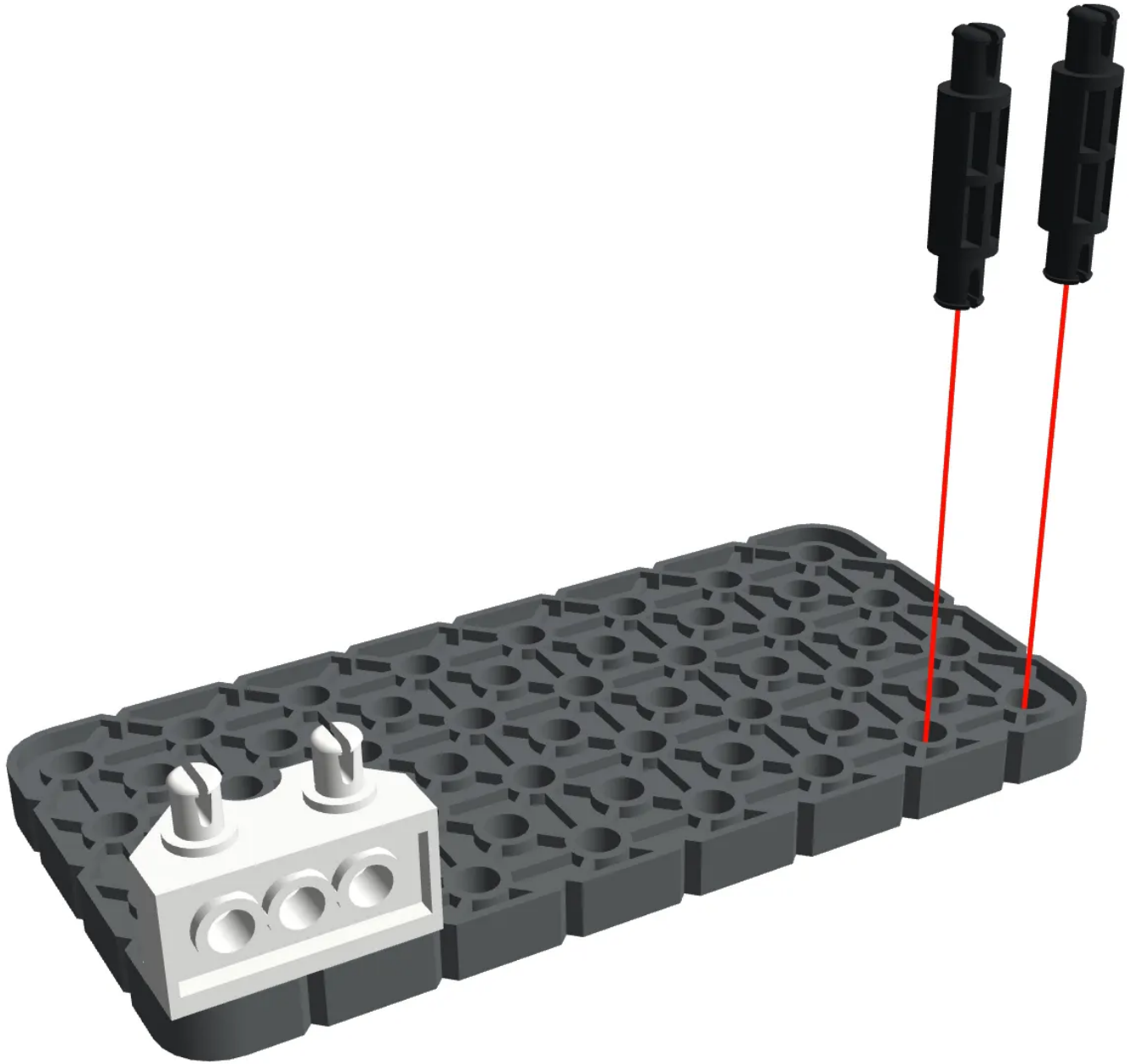

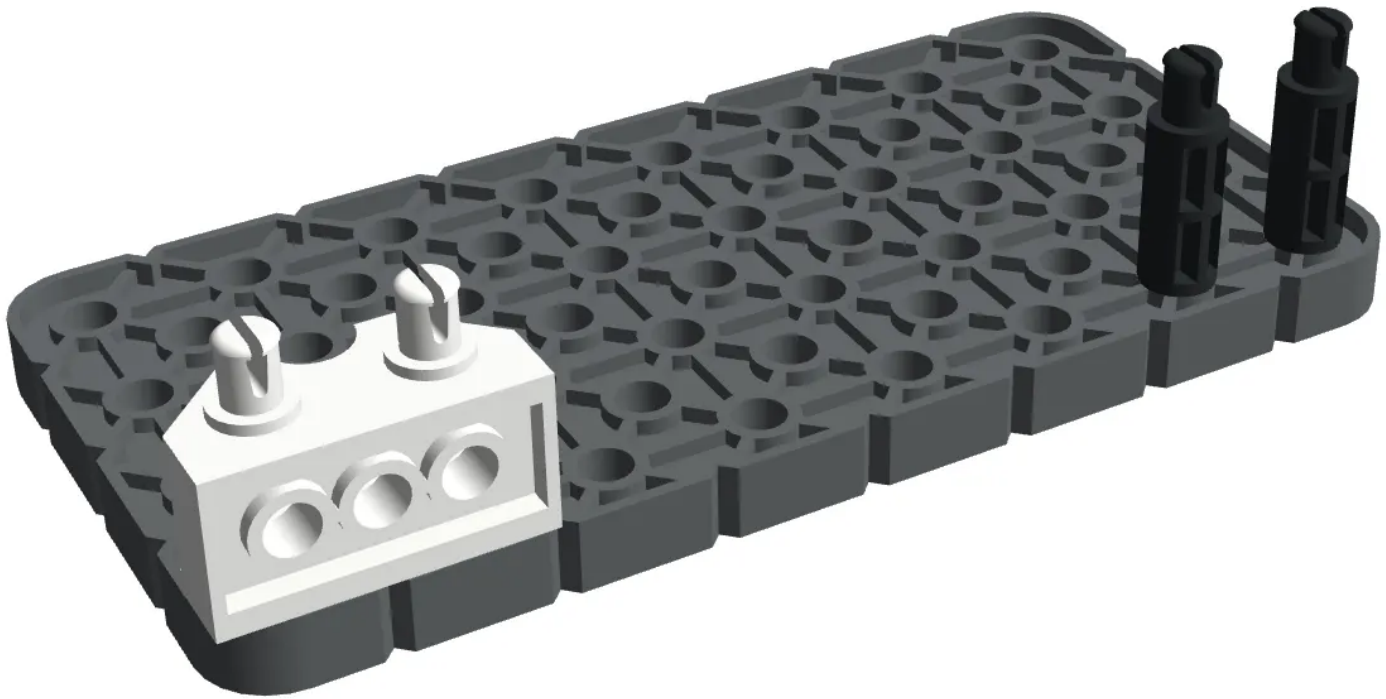

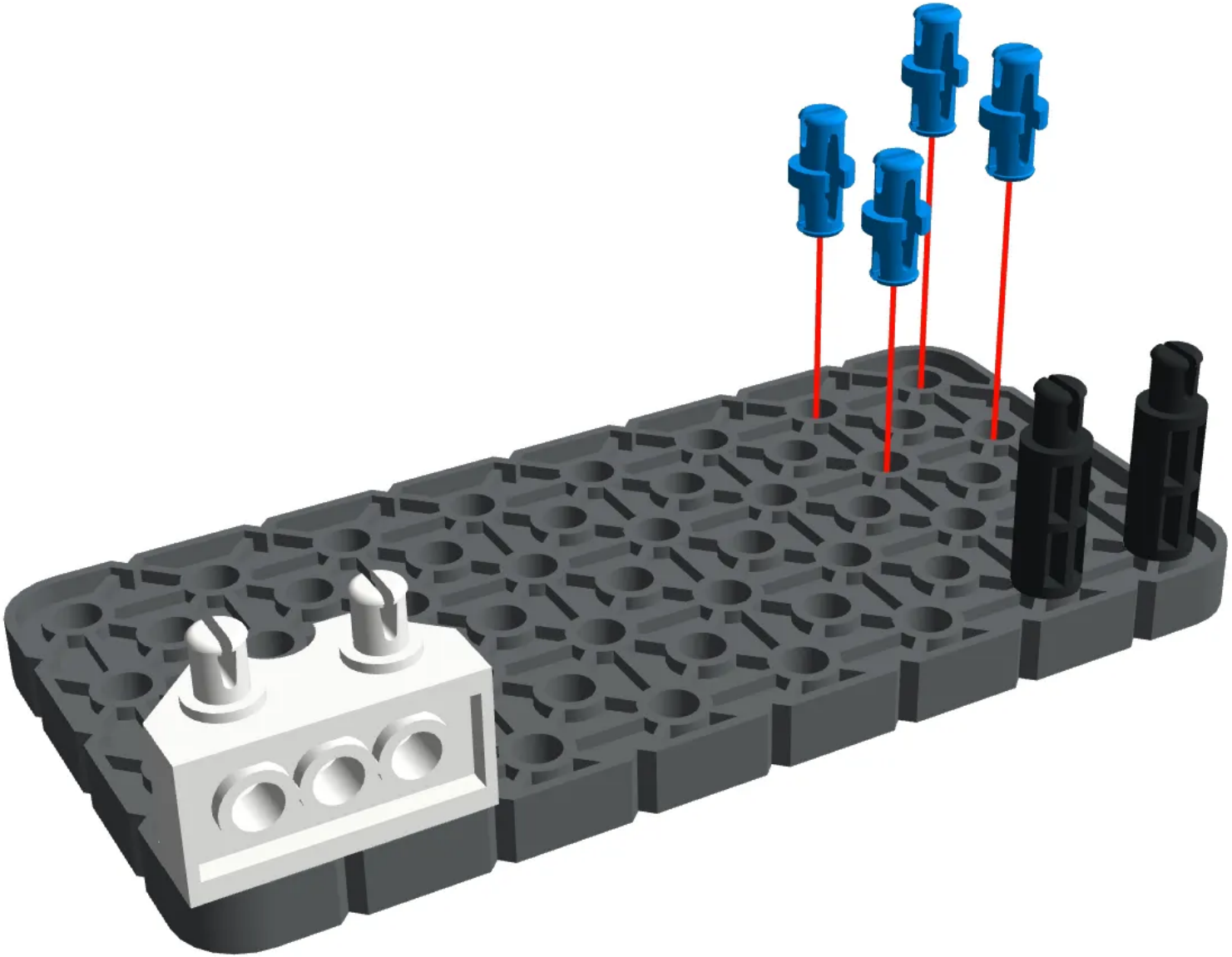

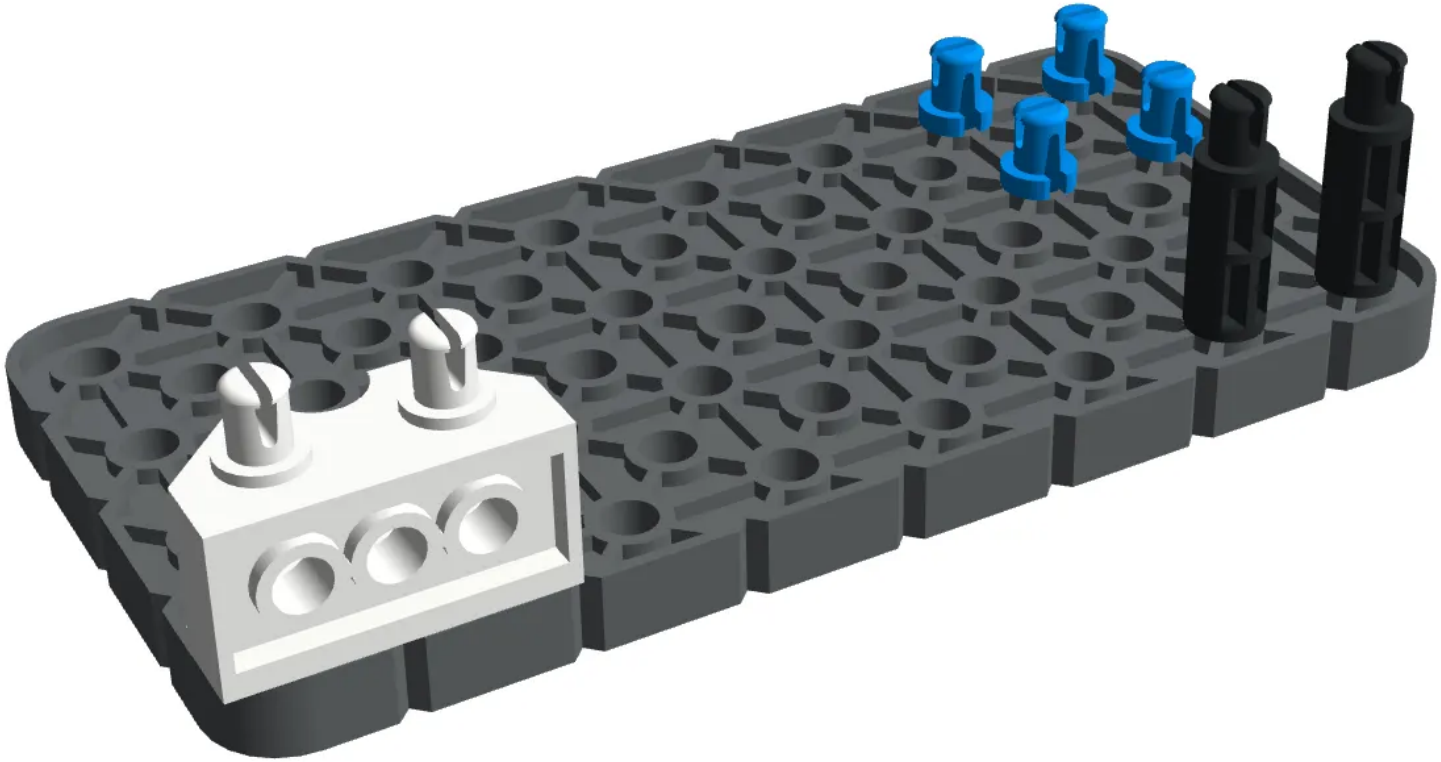

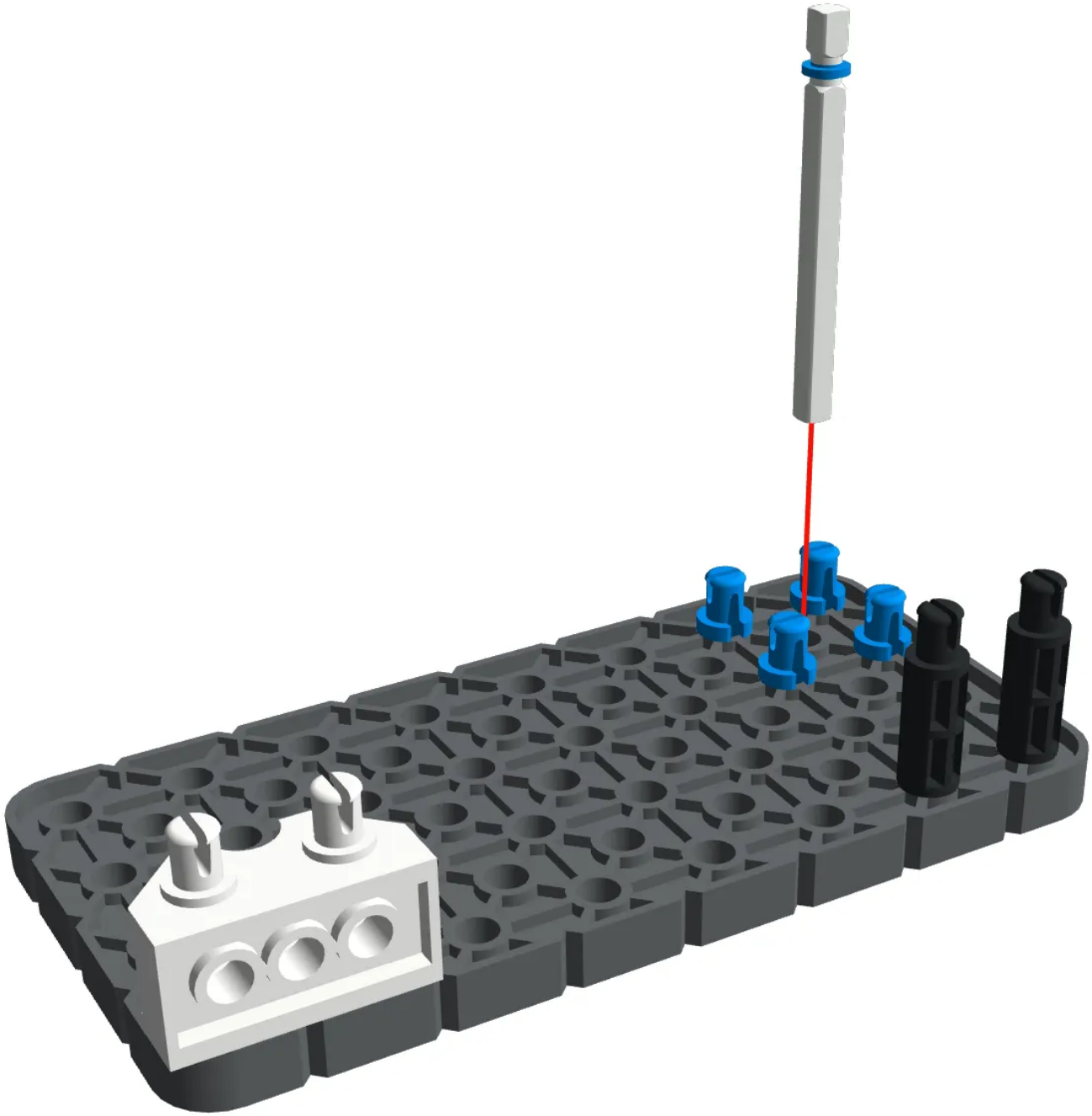

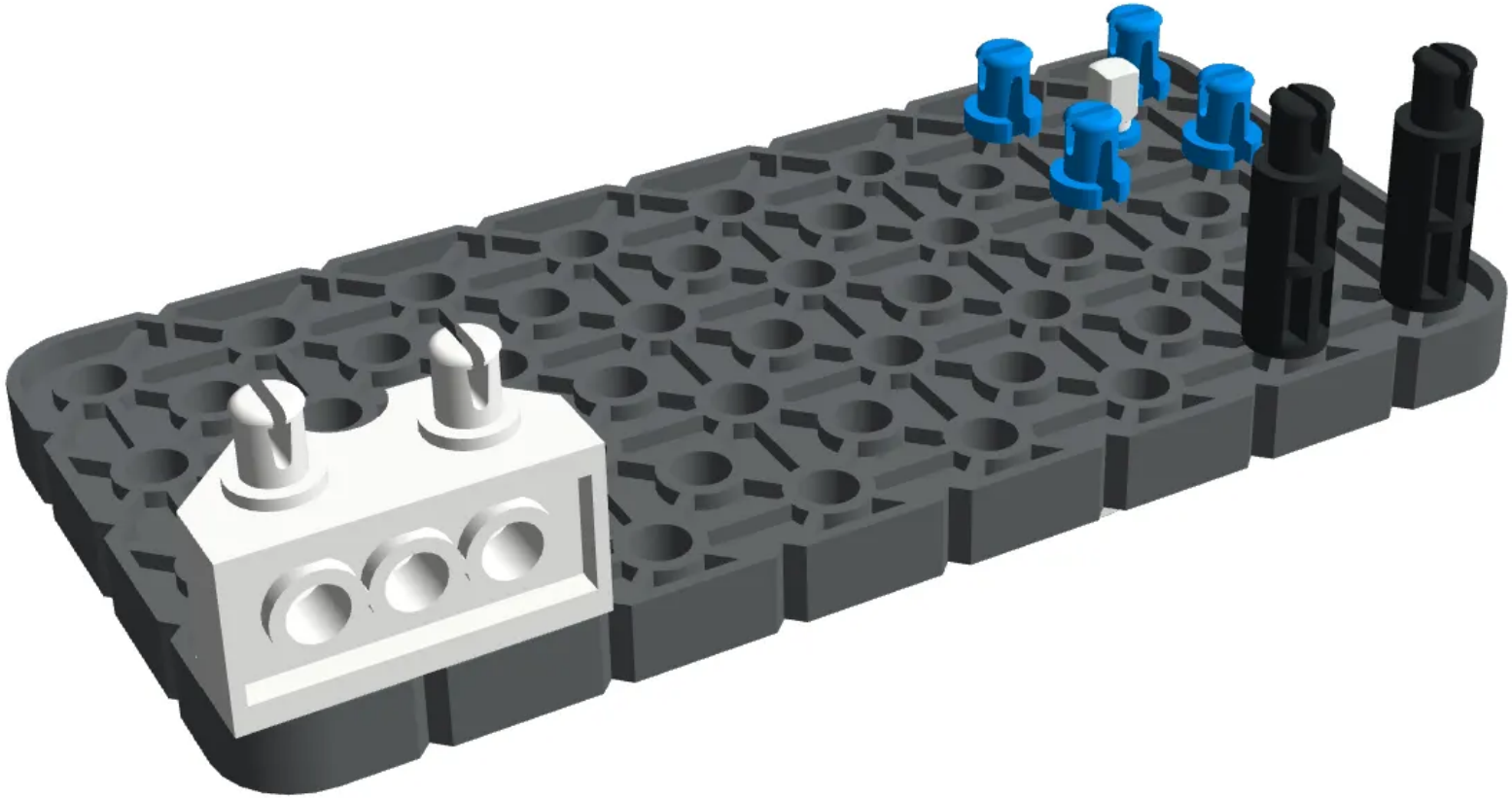

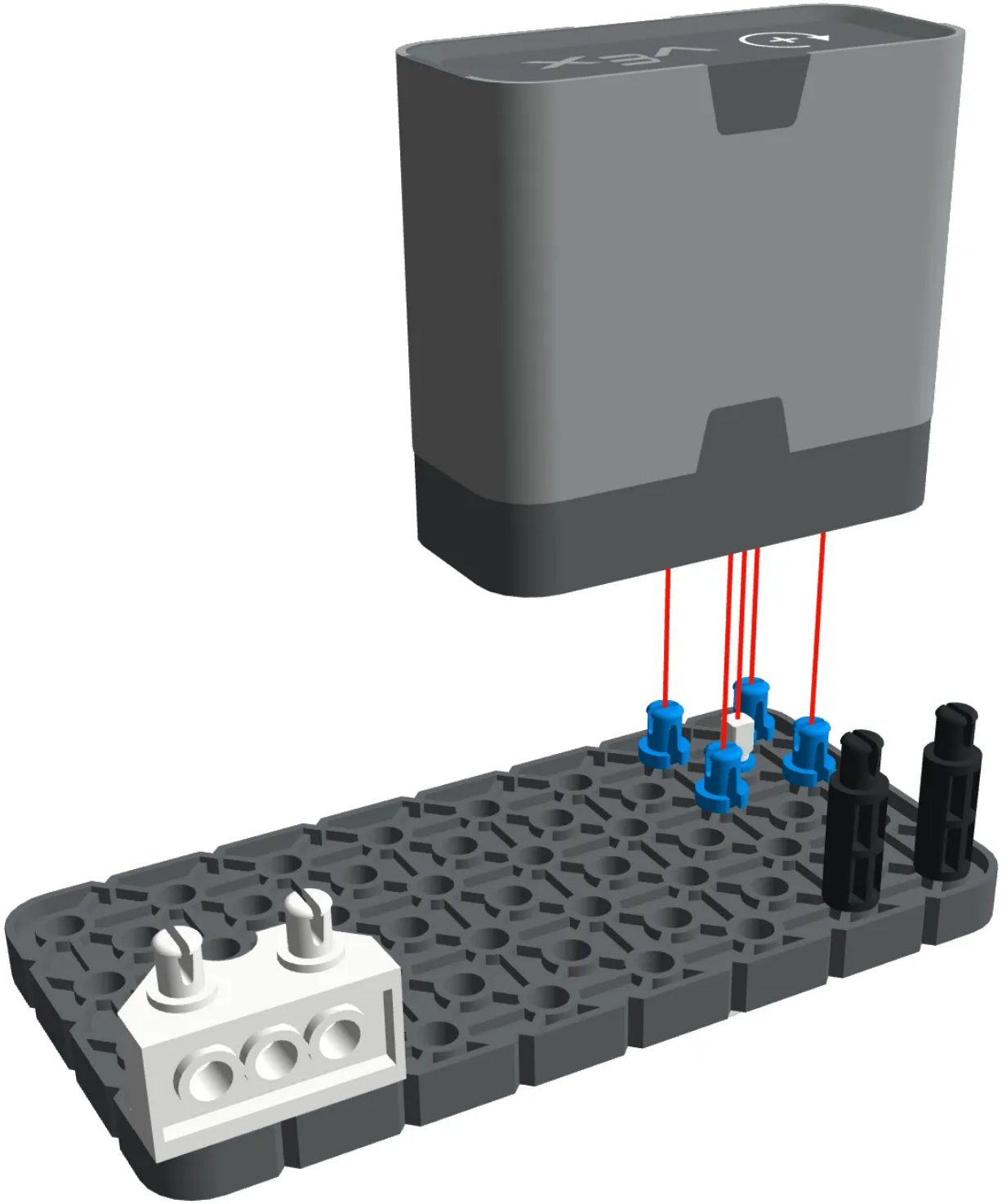
VEX

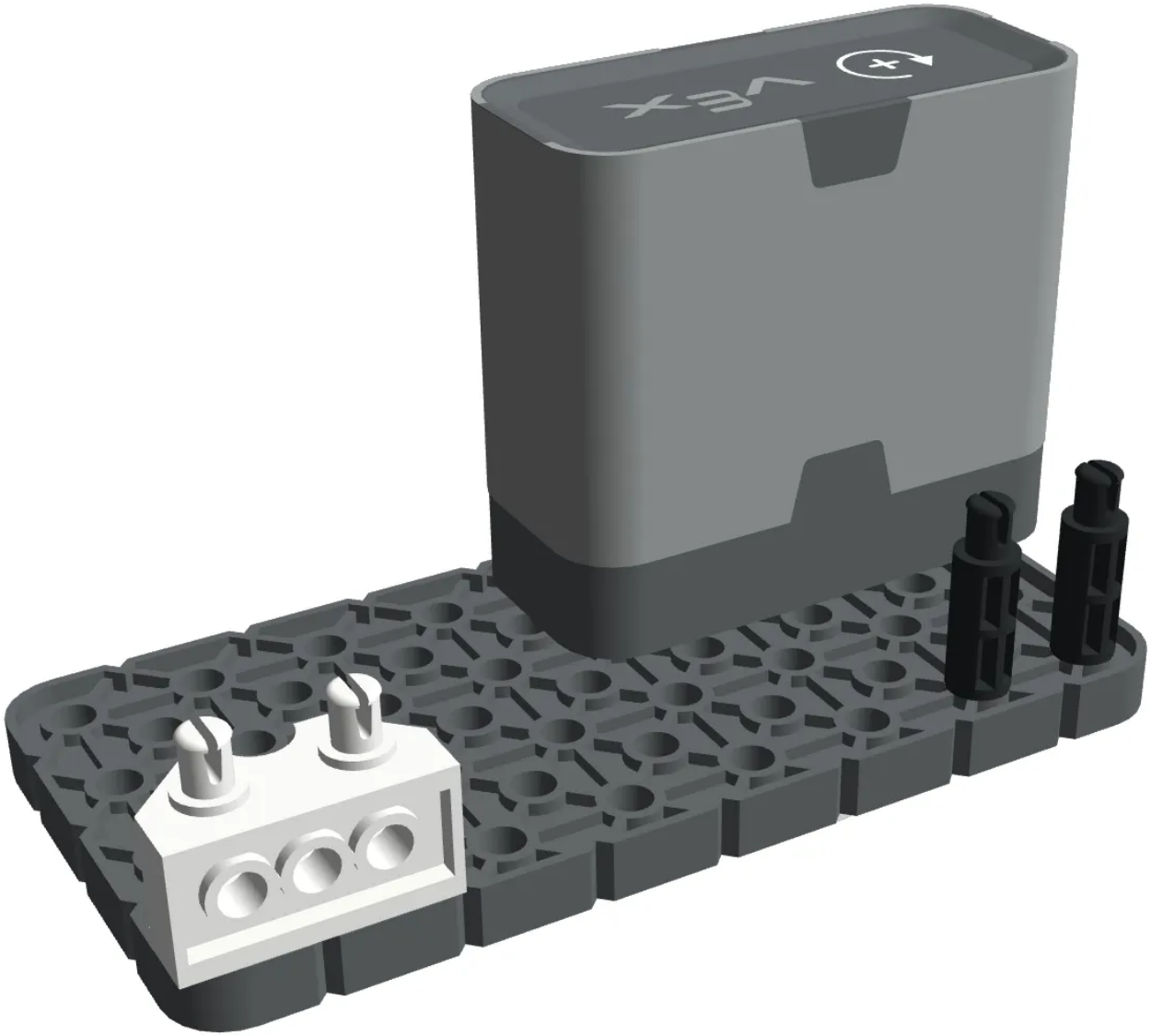
VEX

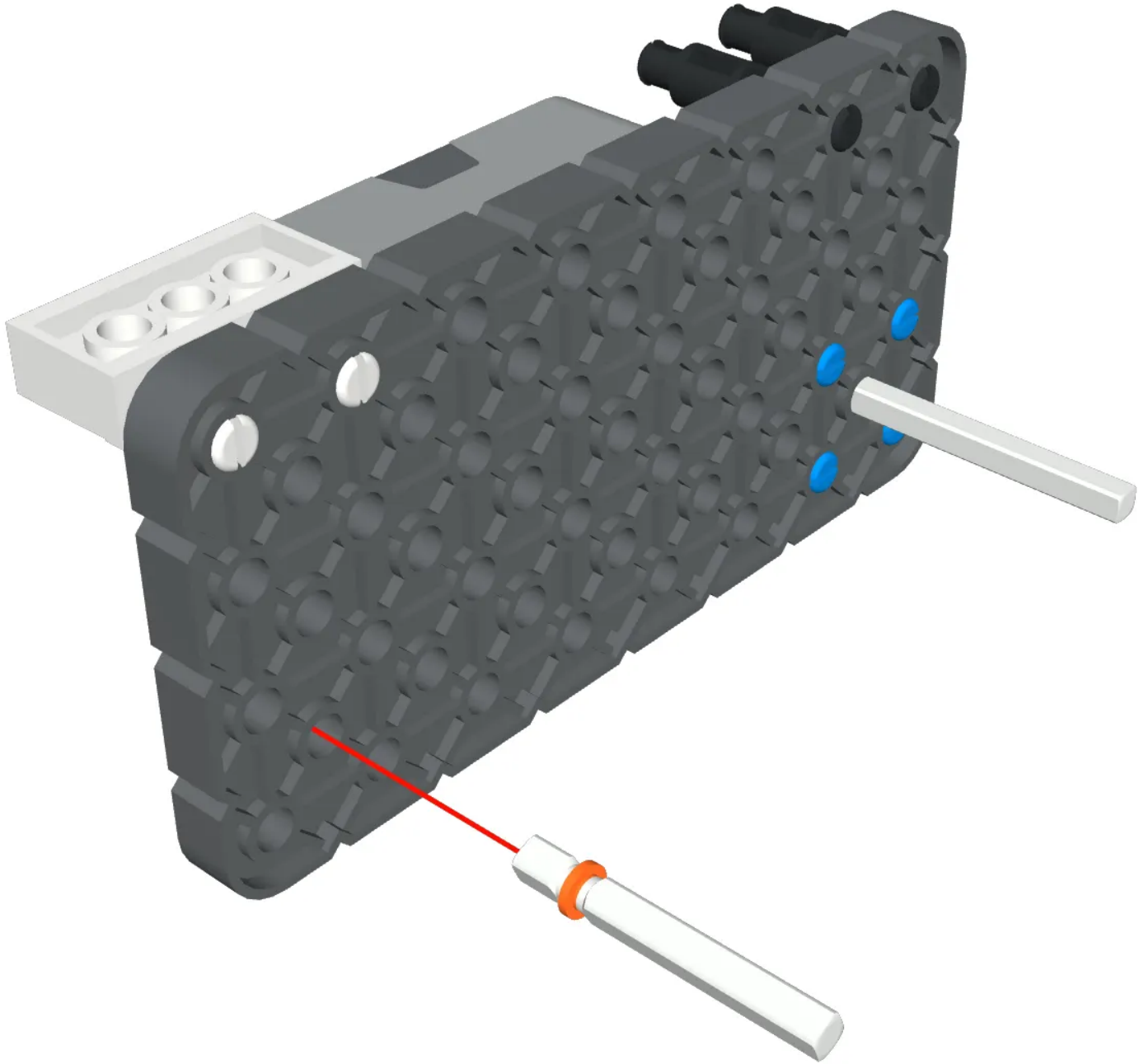

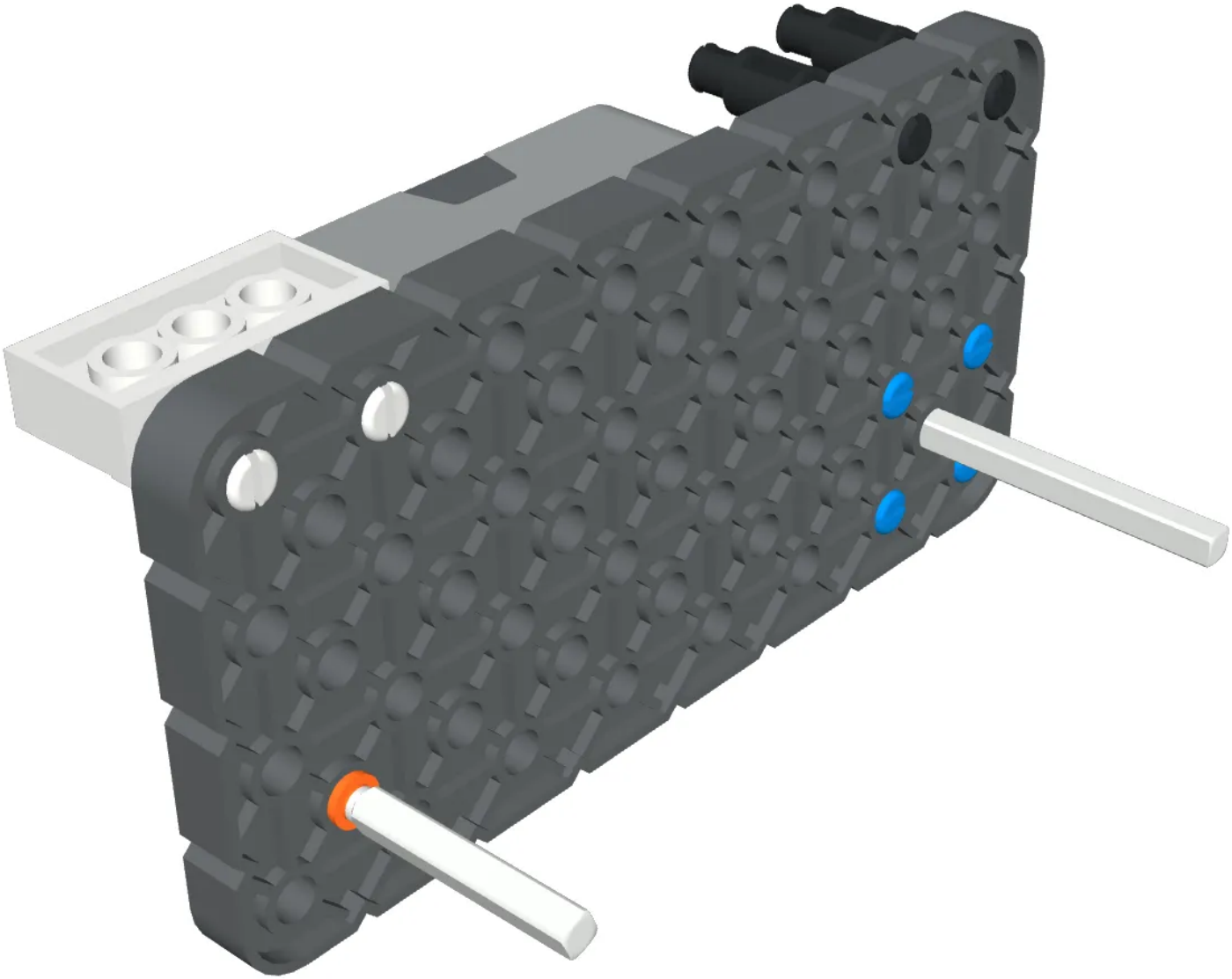

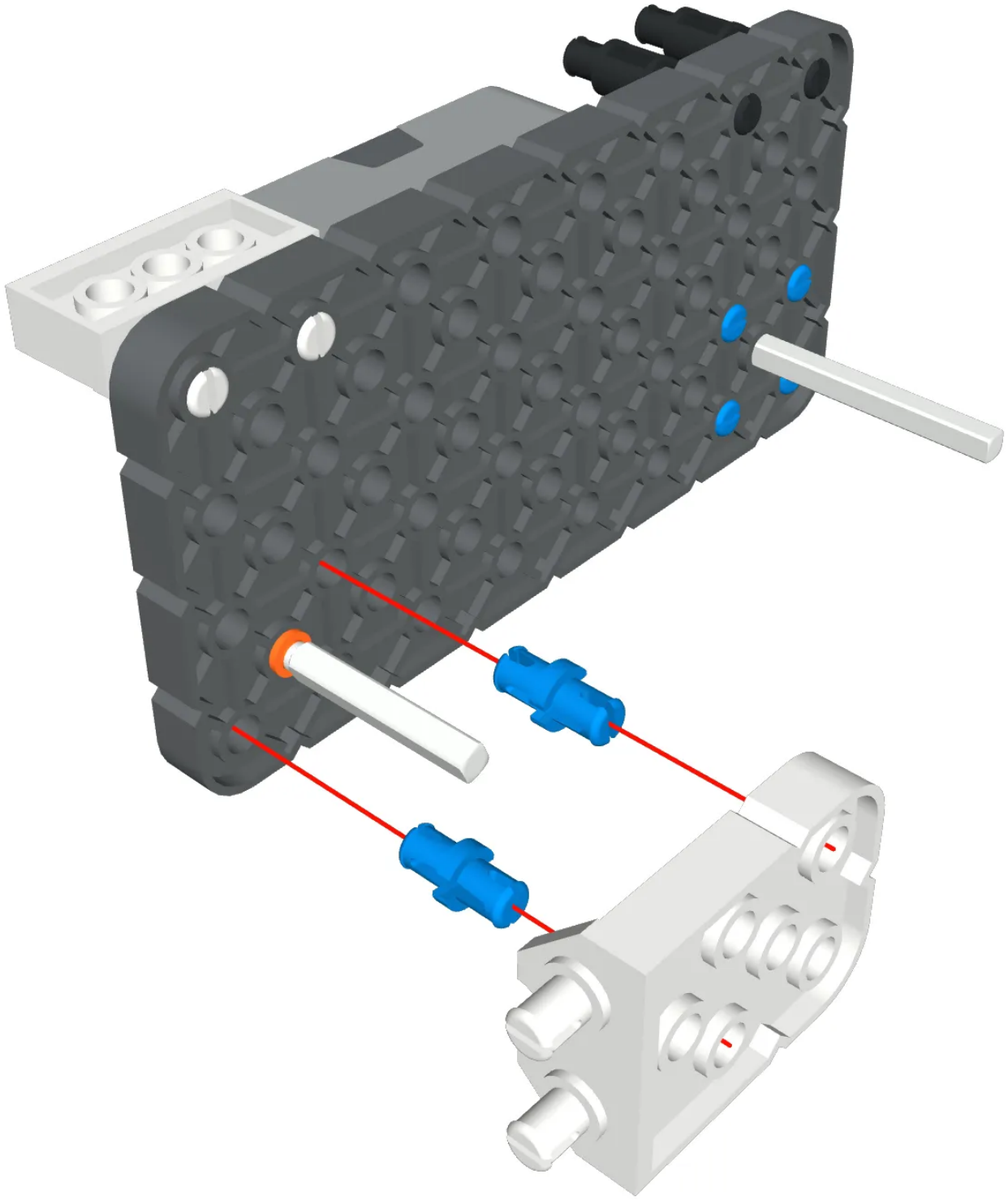

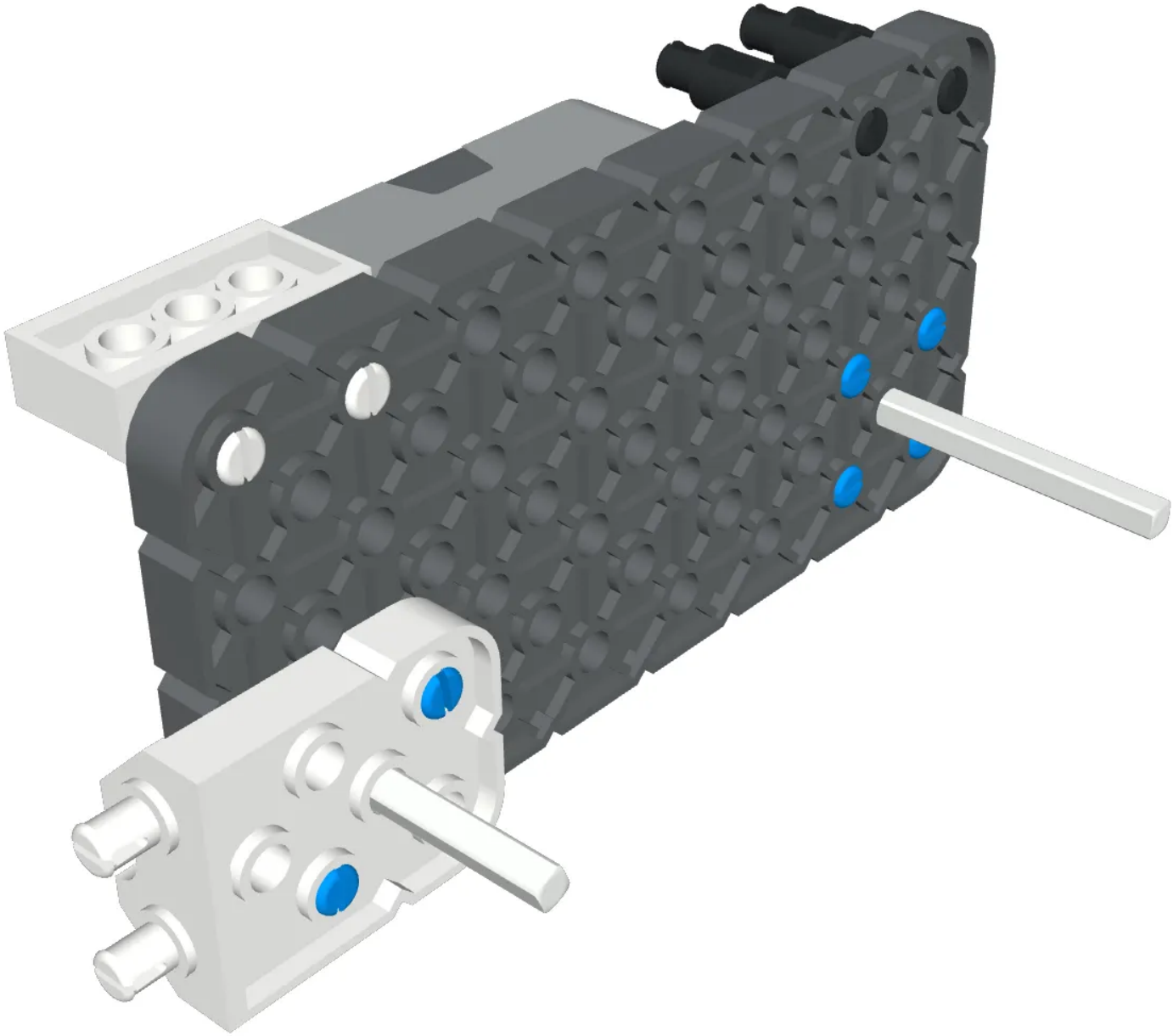

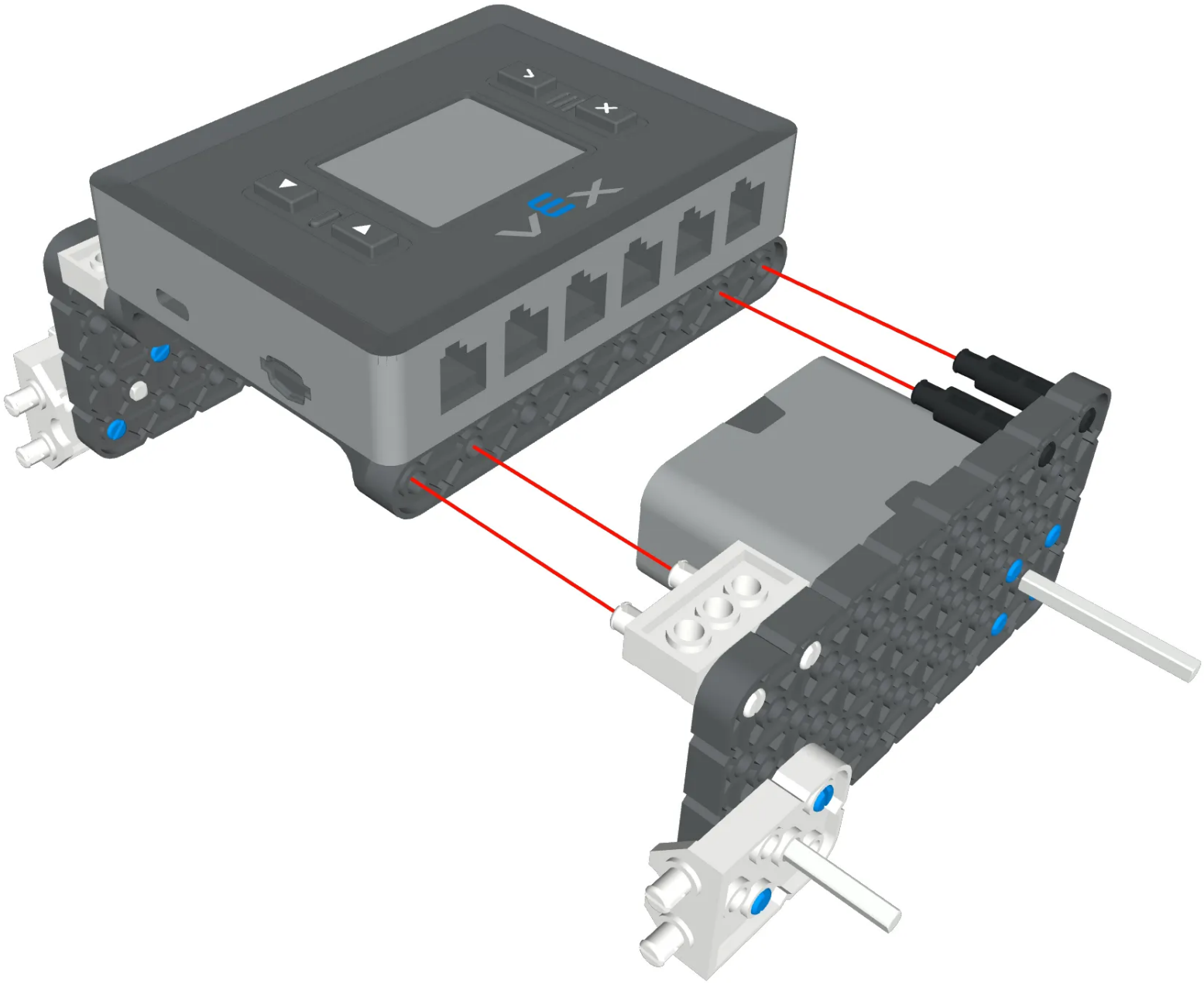

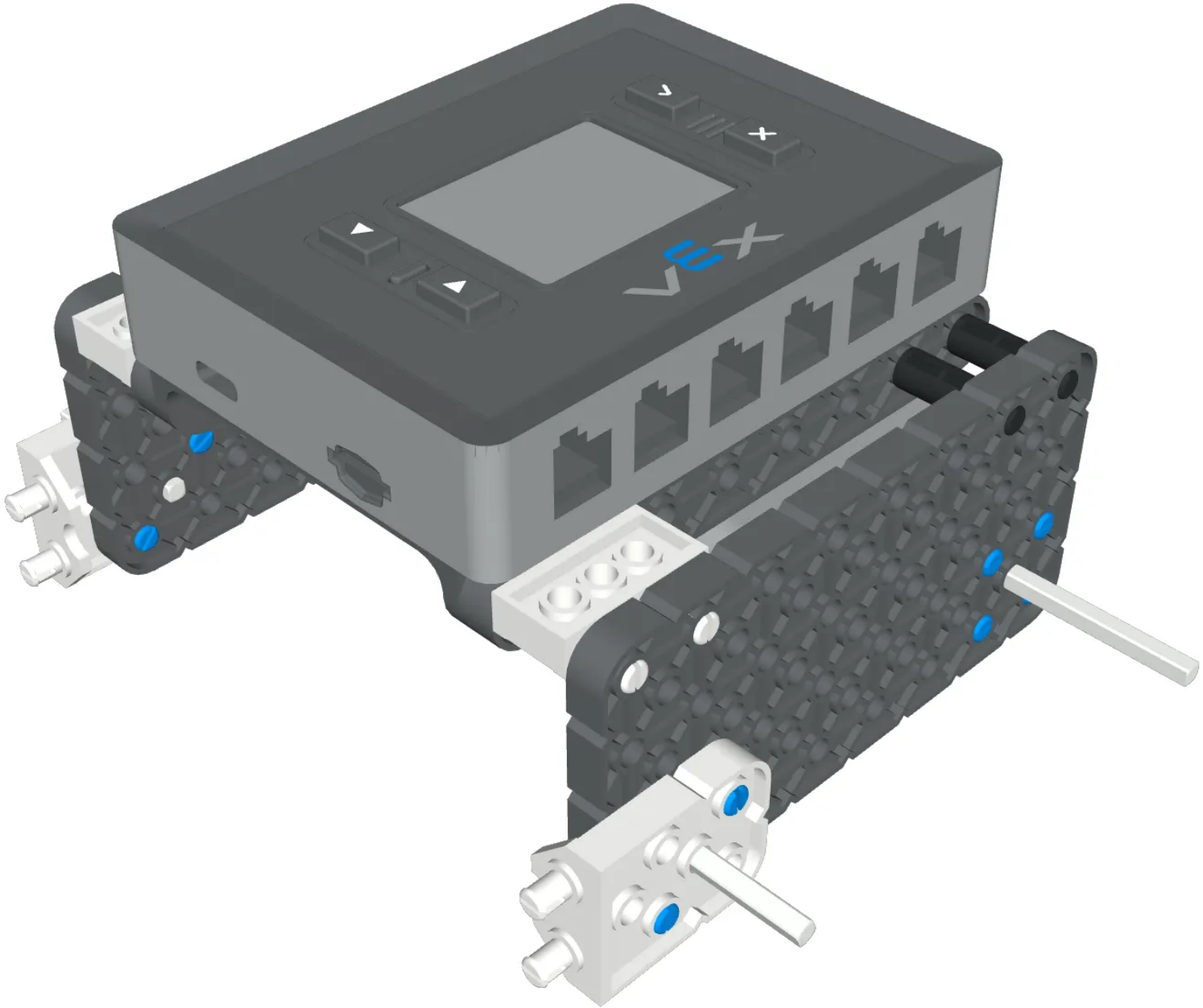
VEX

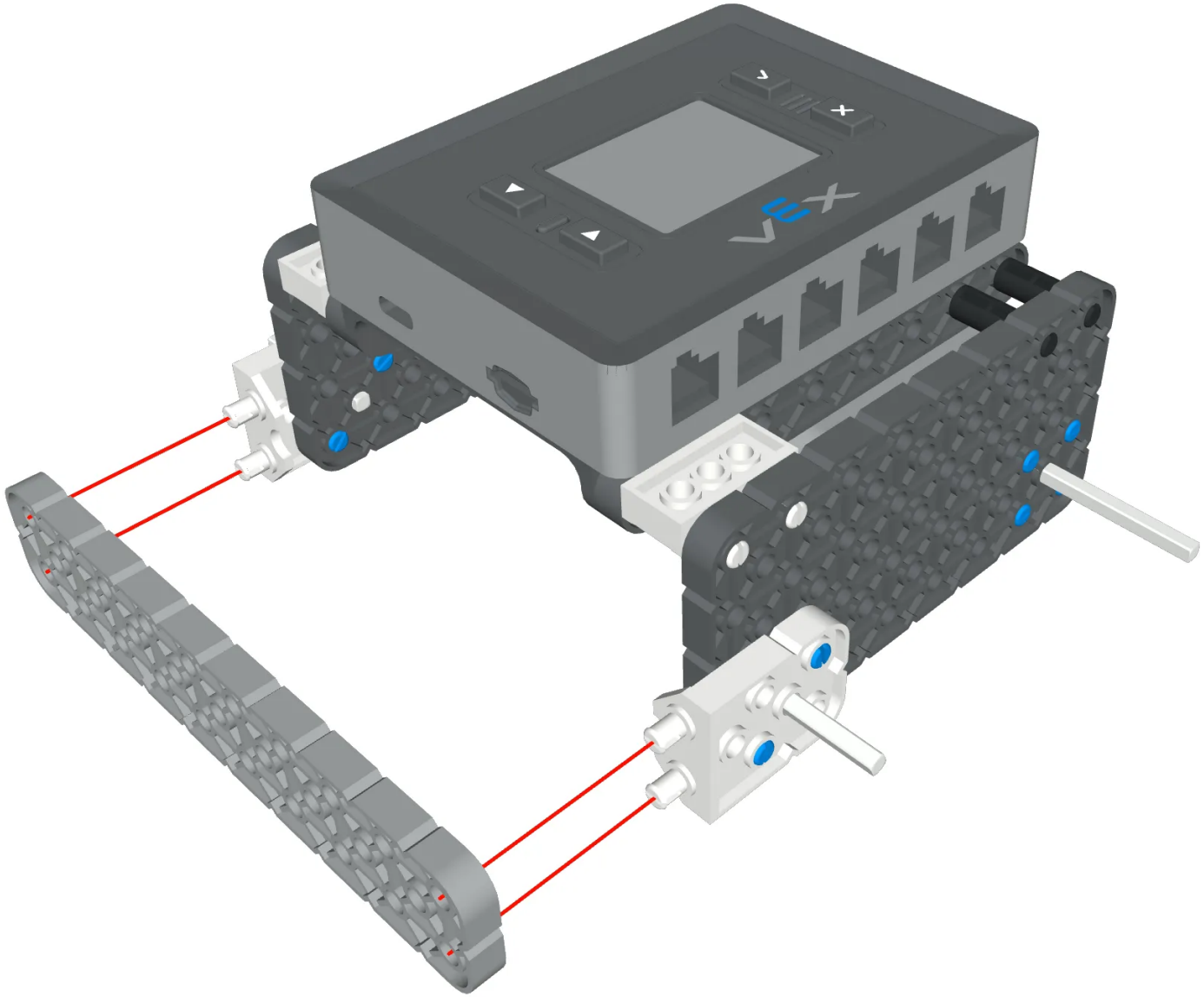

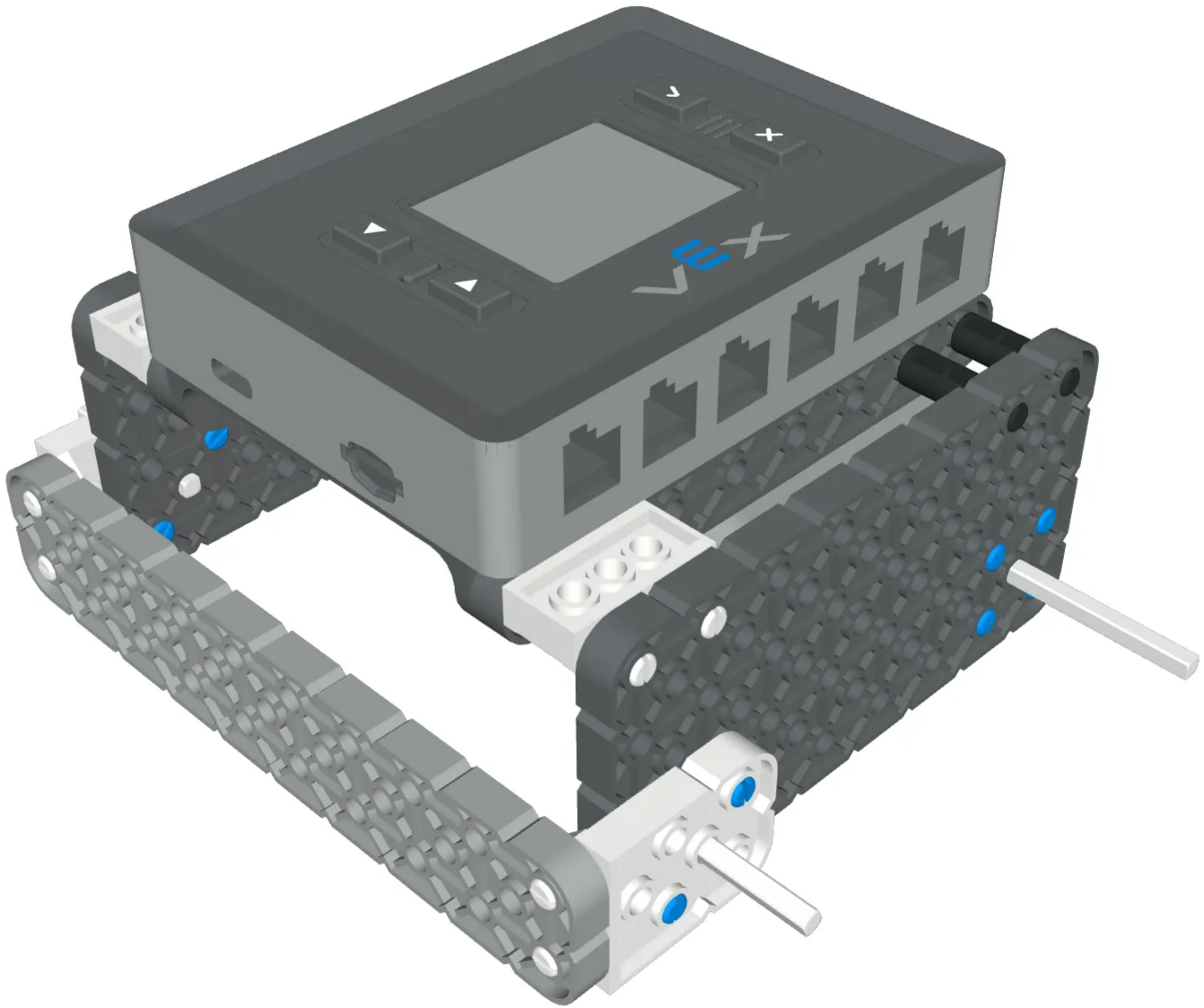

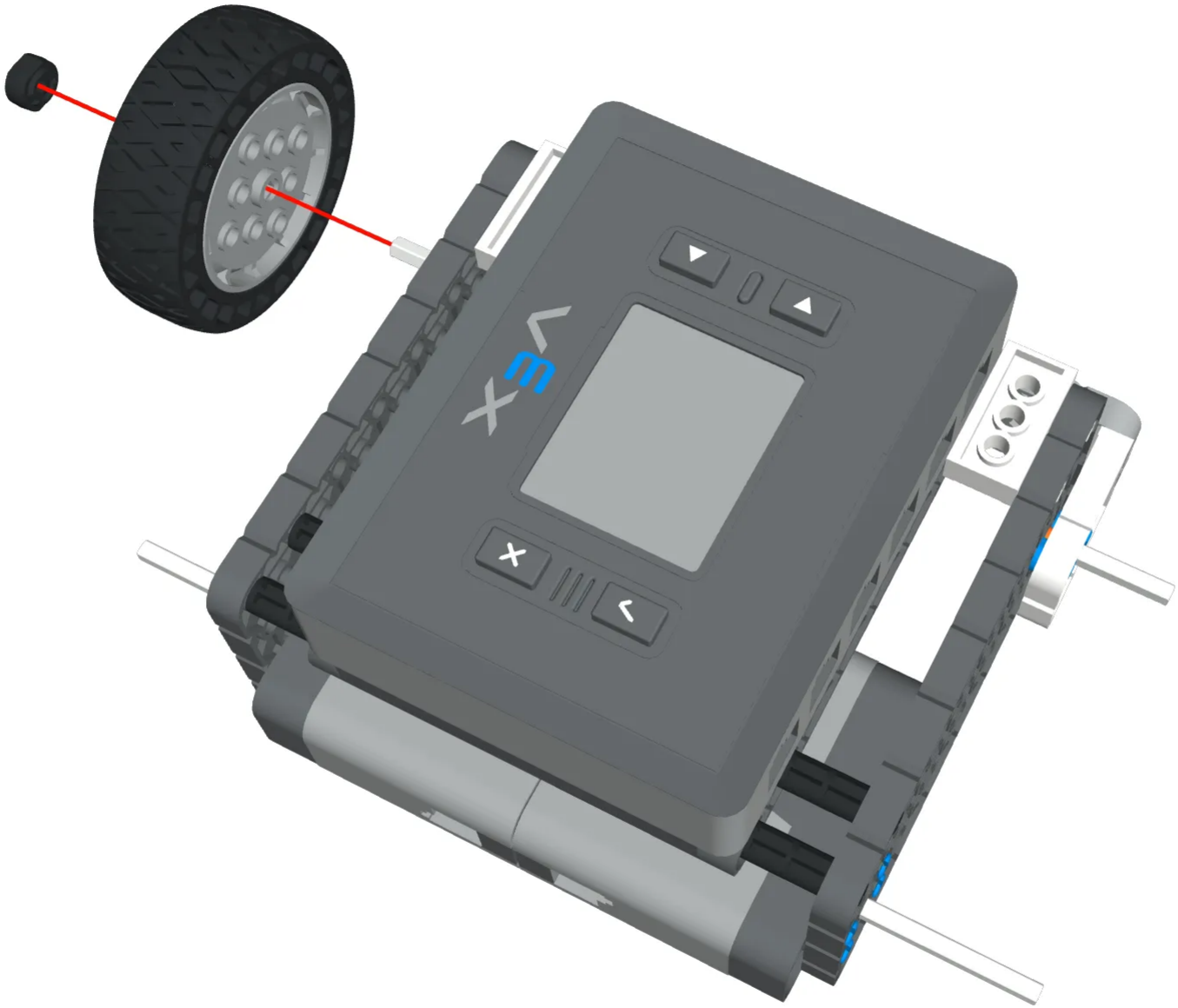
vex

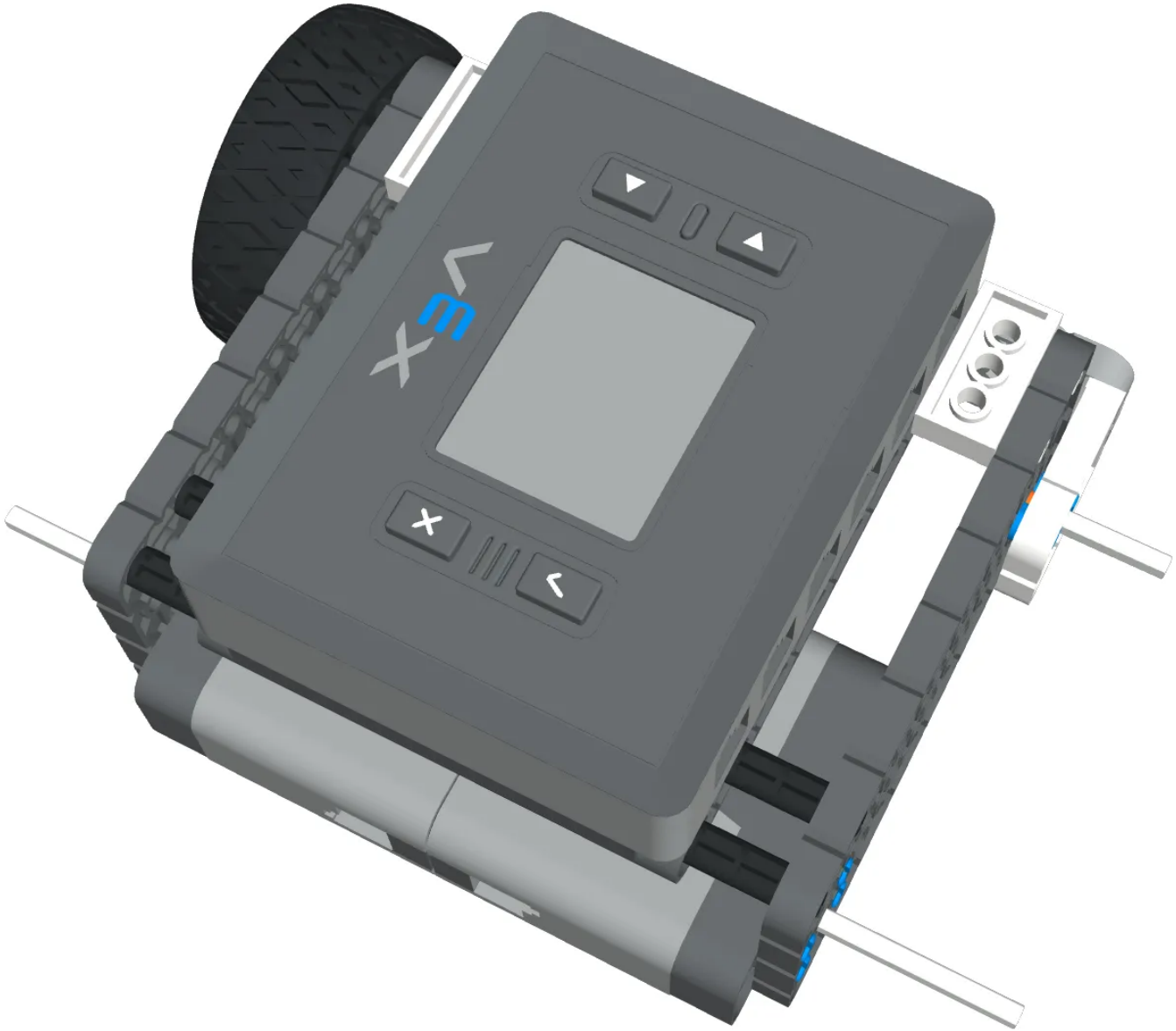
EV3

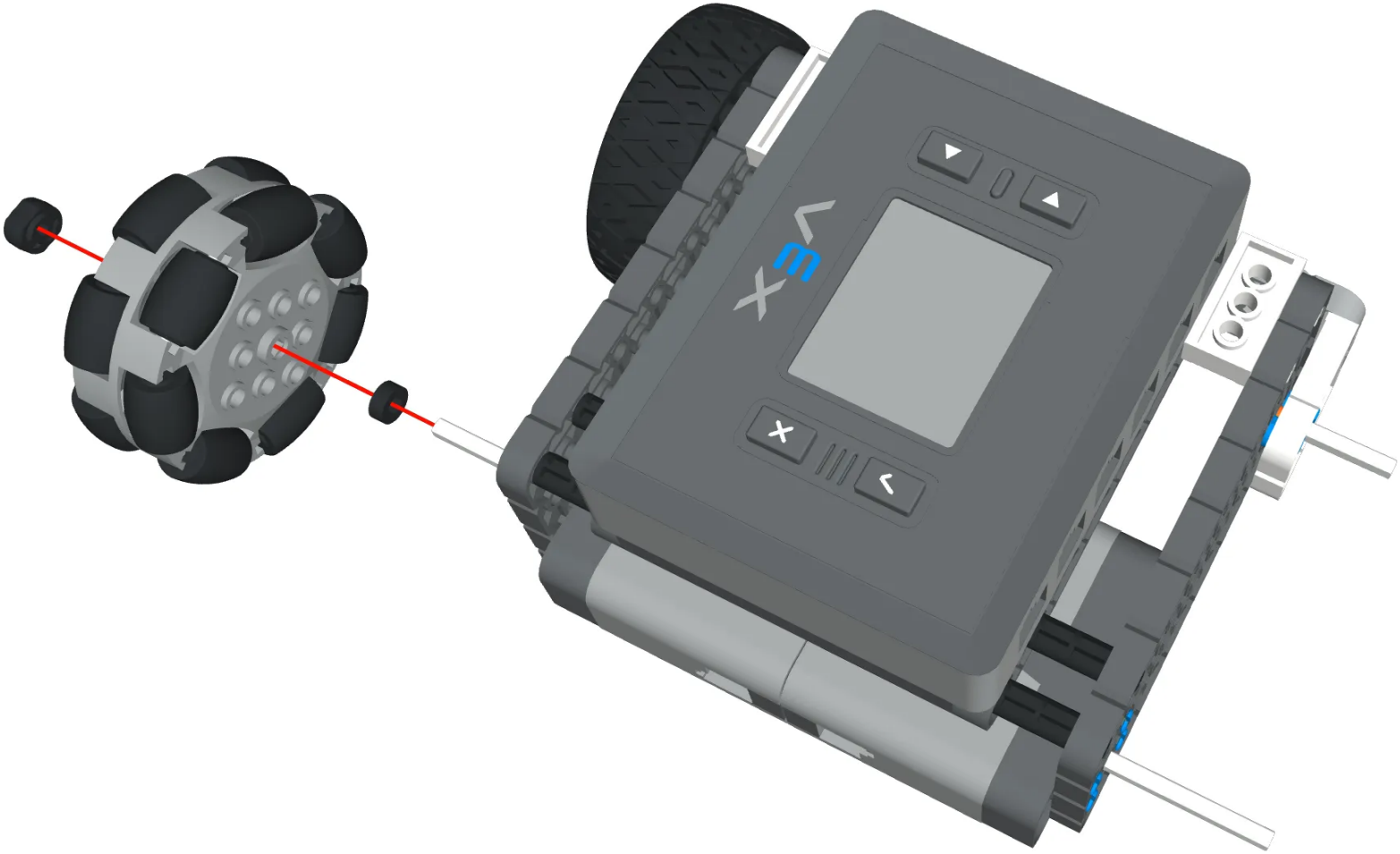
wx

V5
X

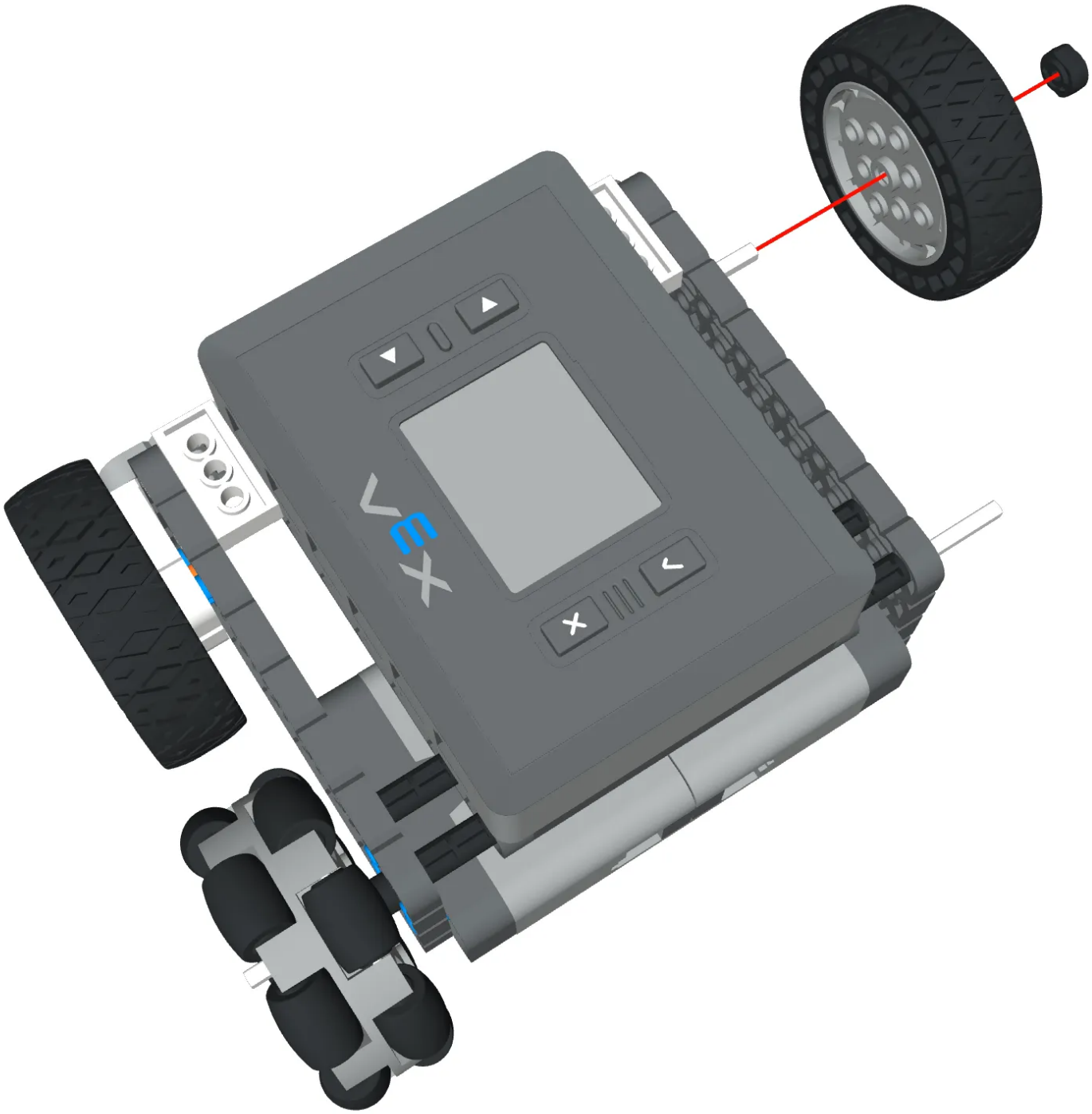
VEX

VEX

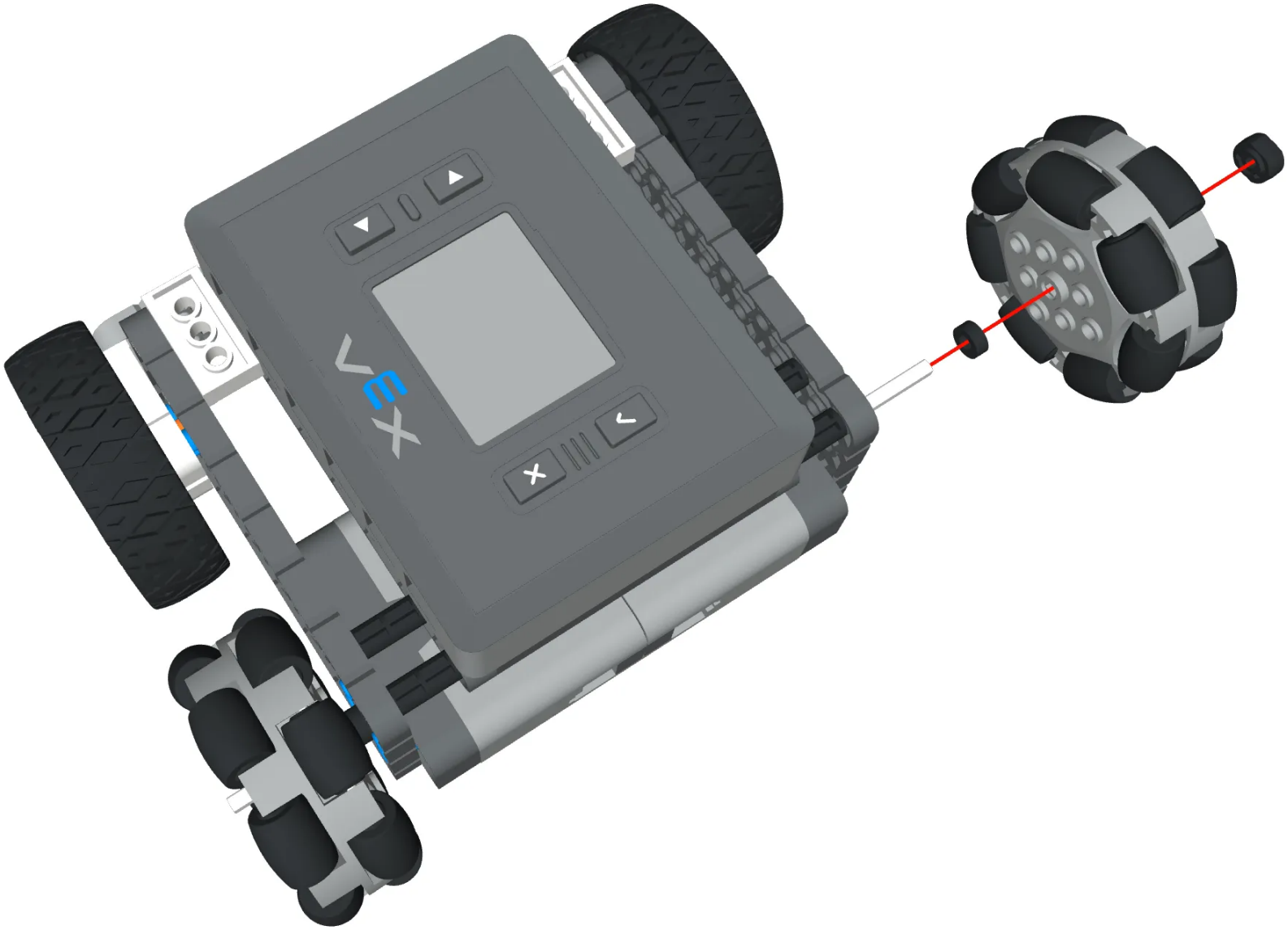
VEX

VEX

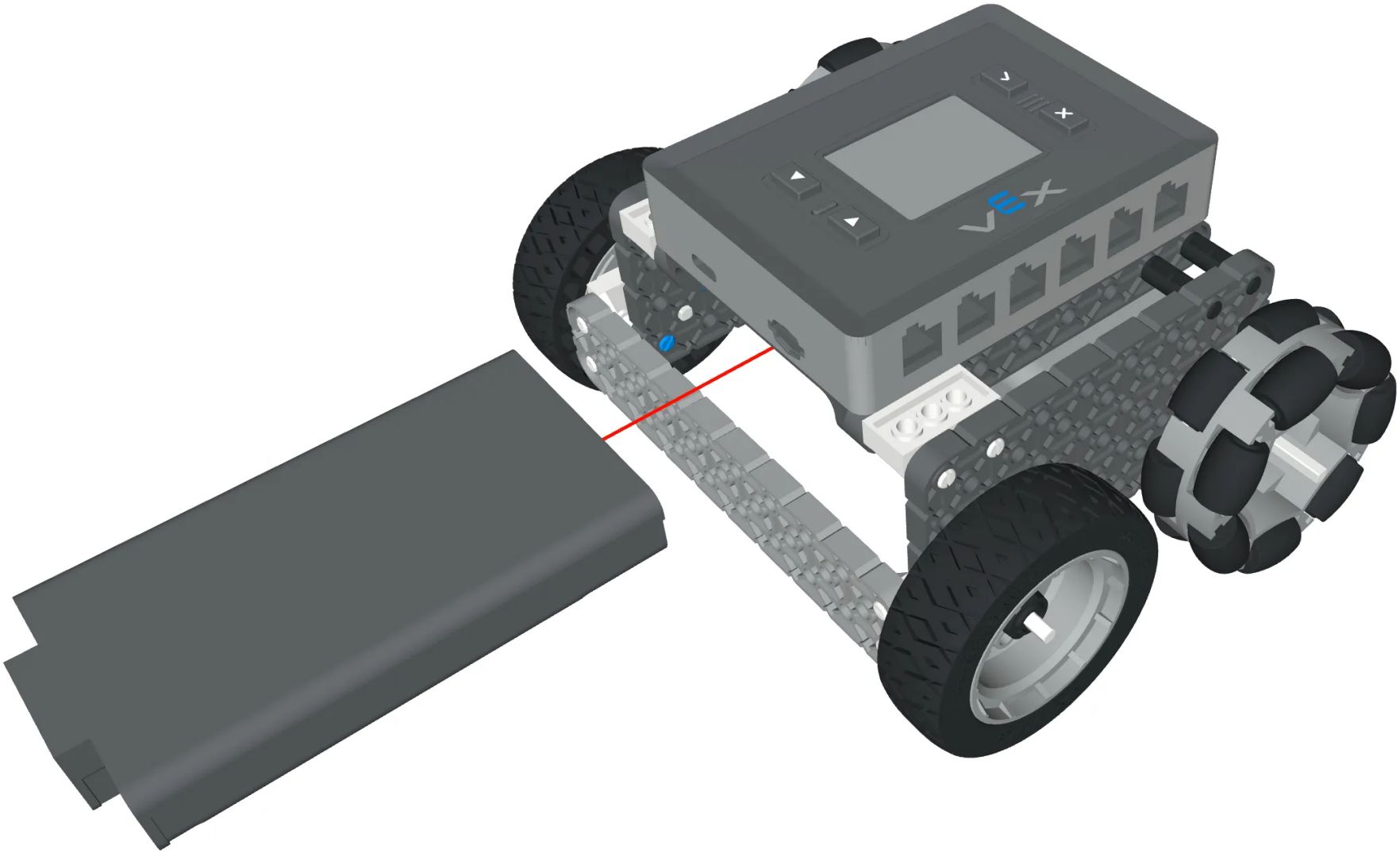

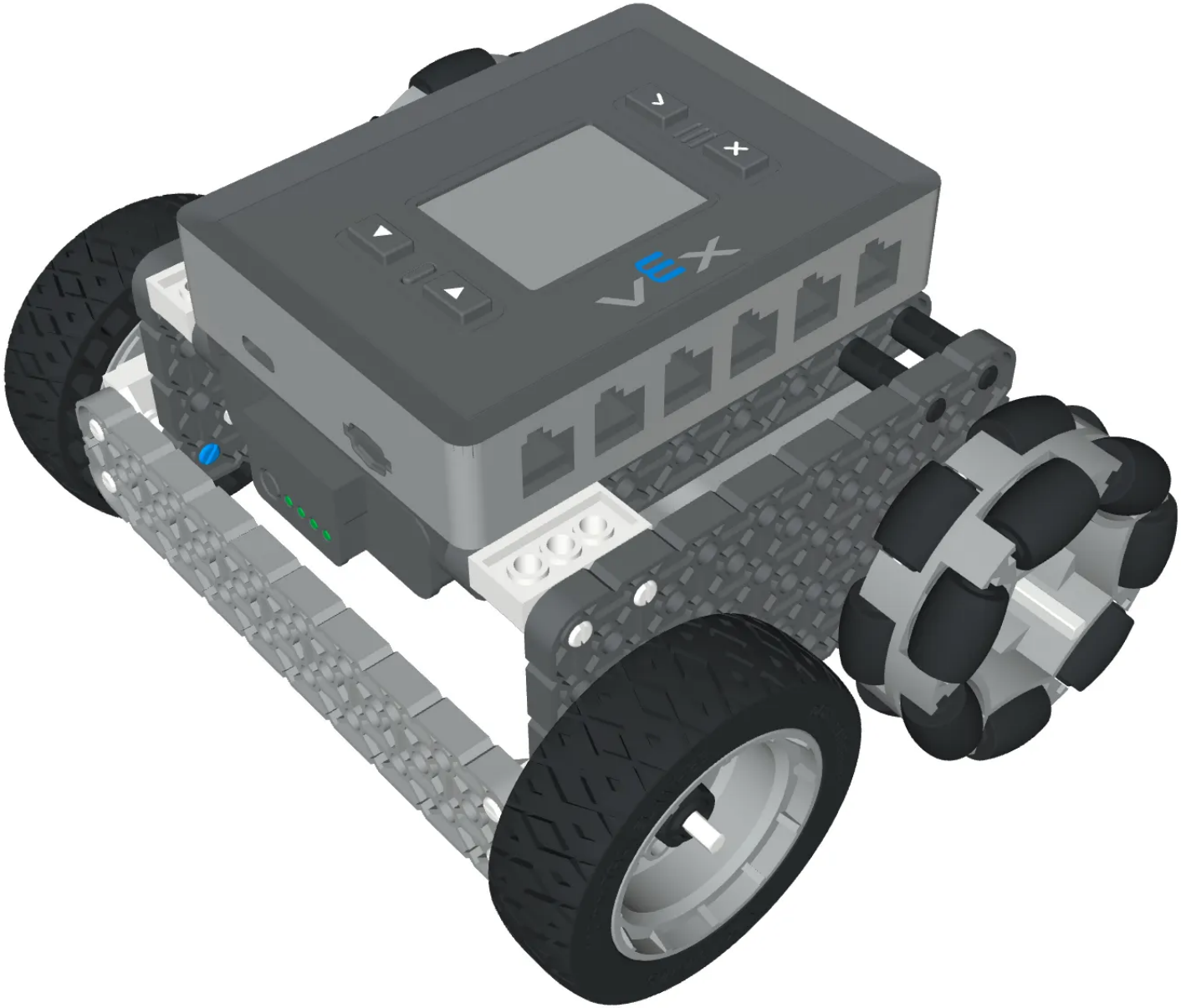
VEX

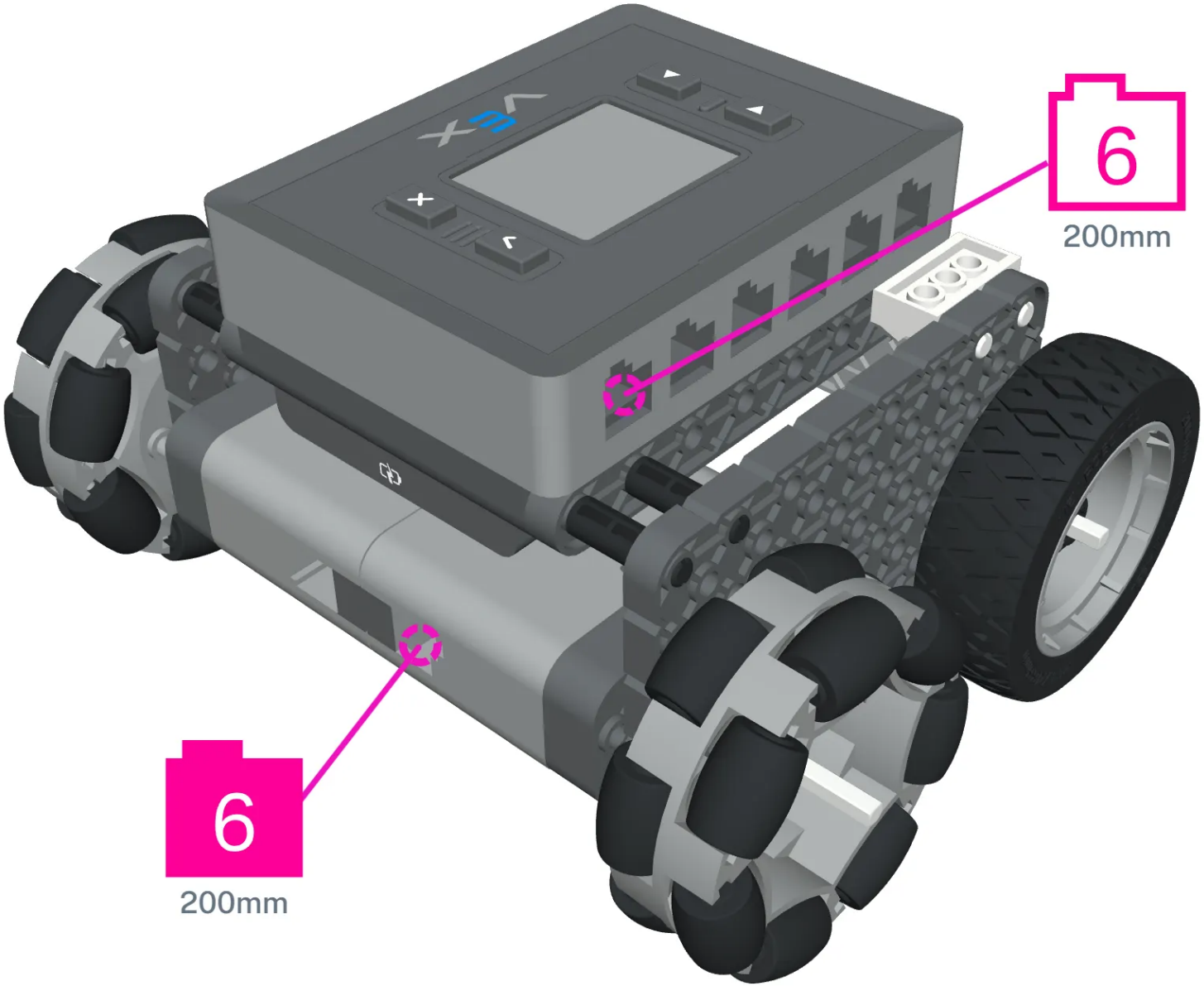
6
200mm
6
200mm

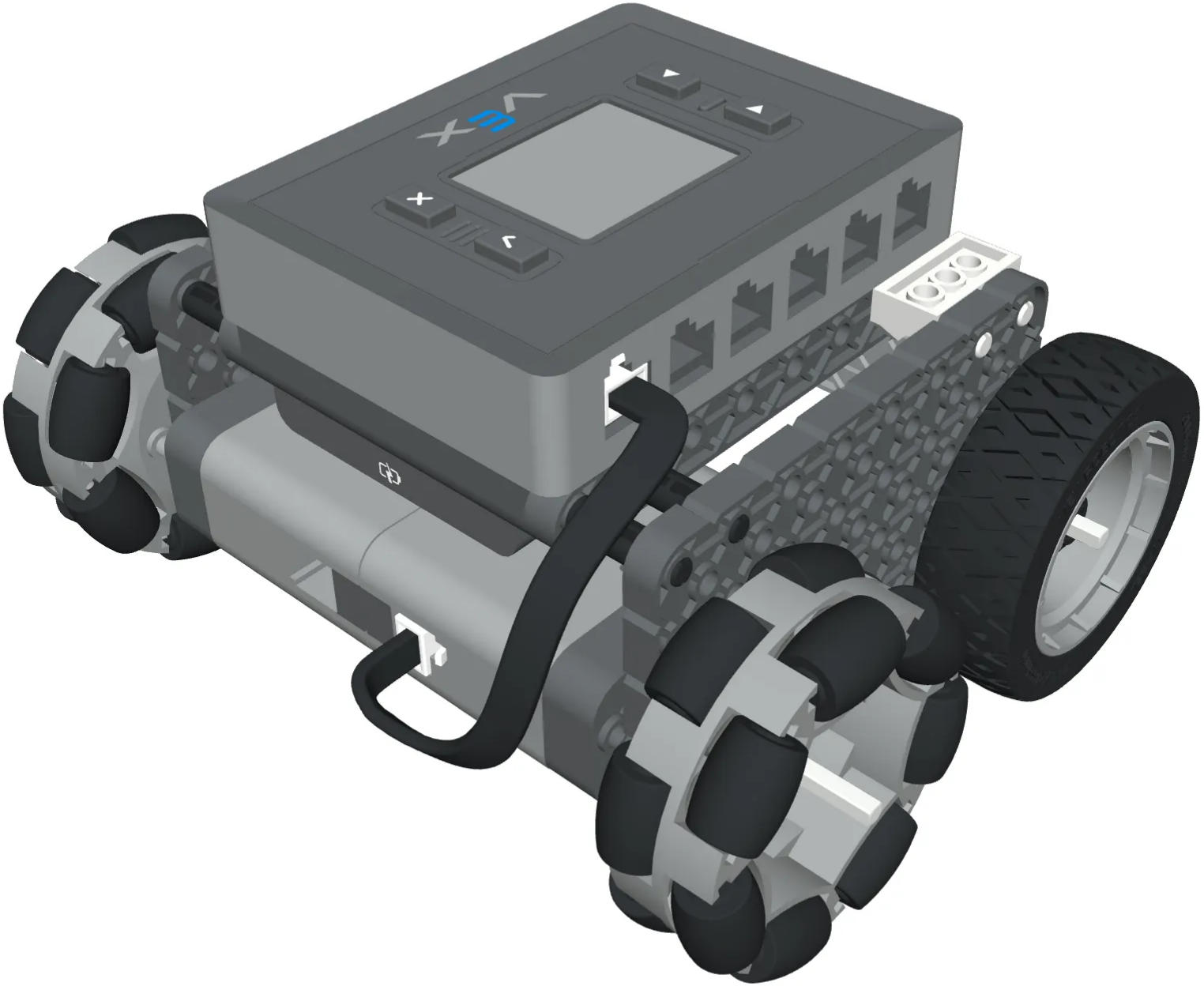

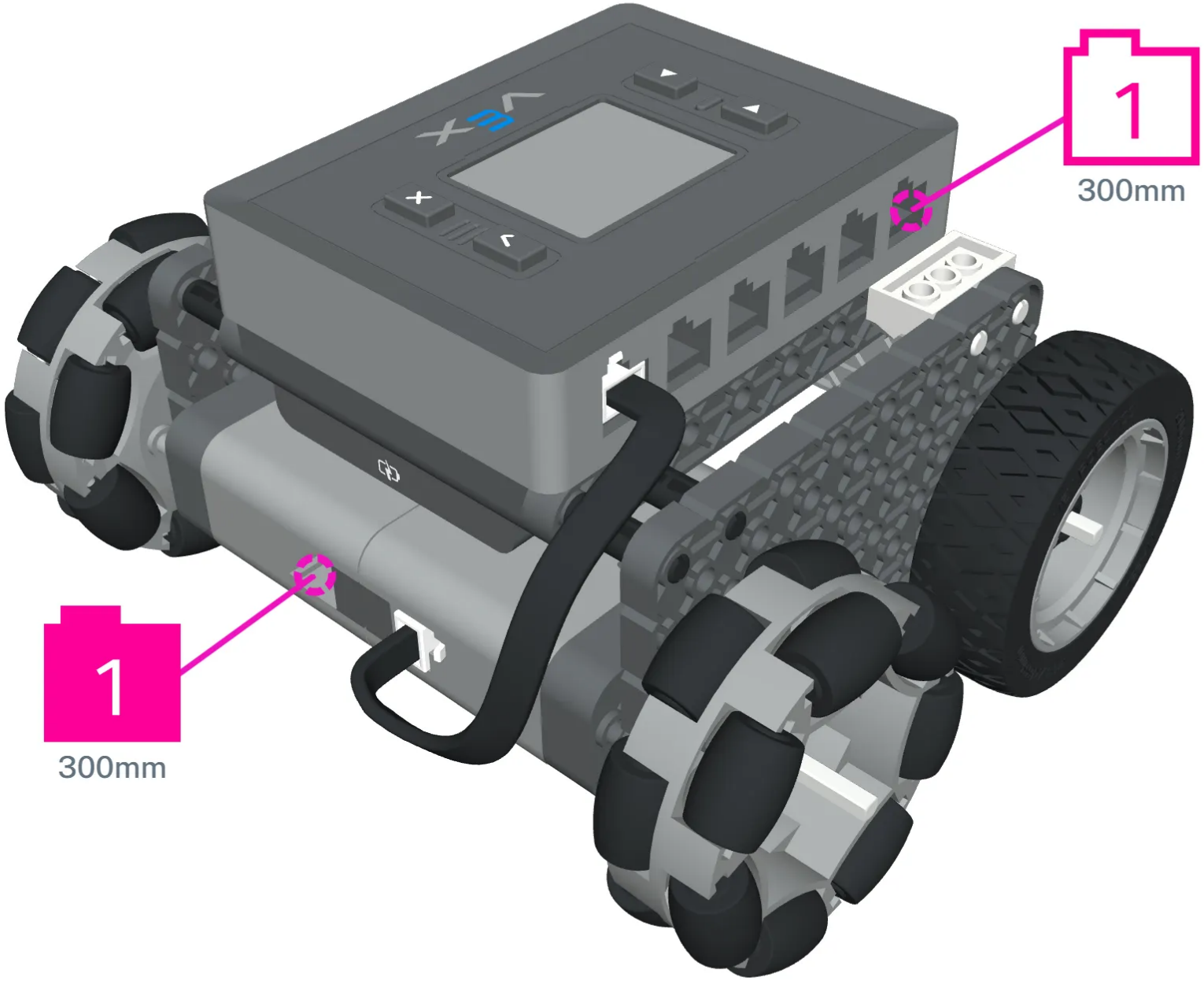
1
300mm
1
300mm

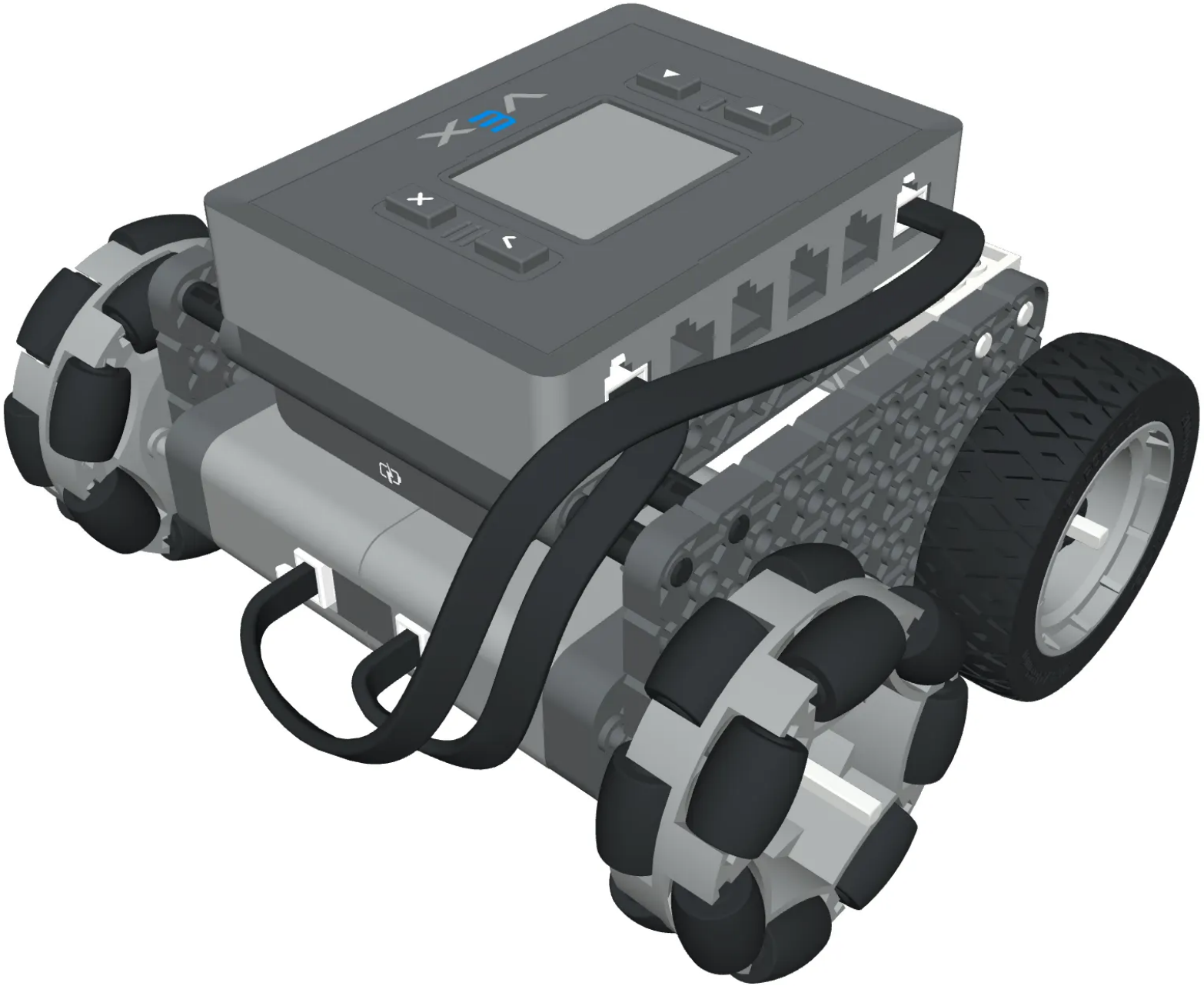

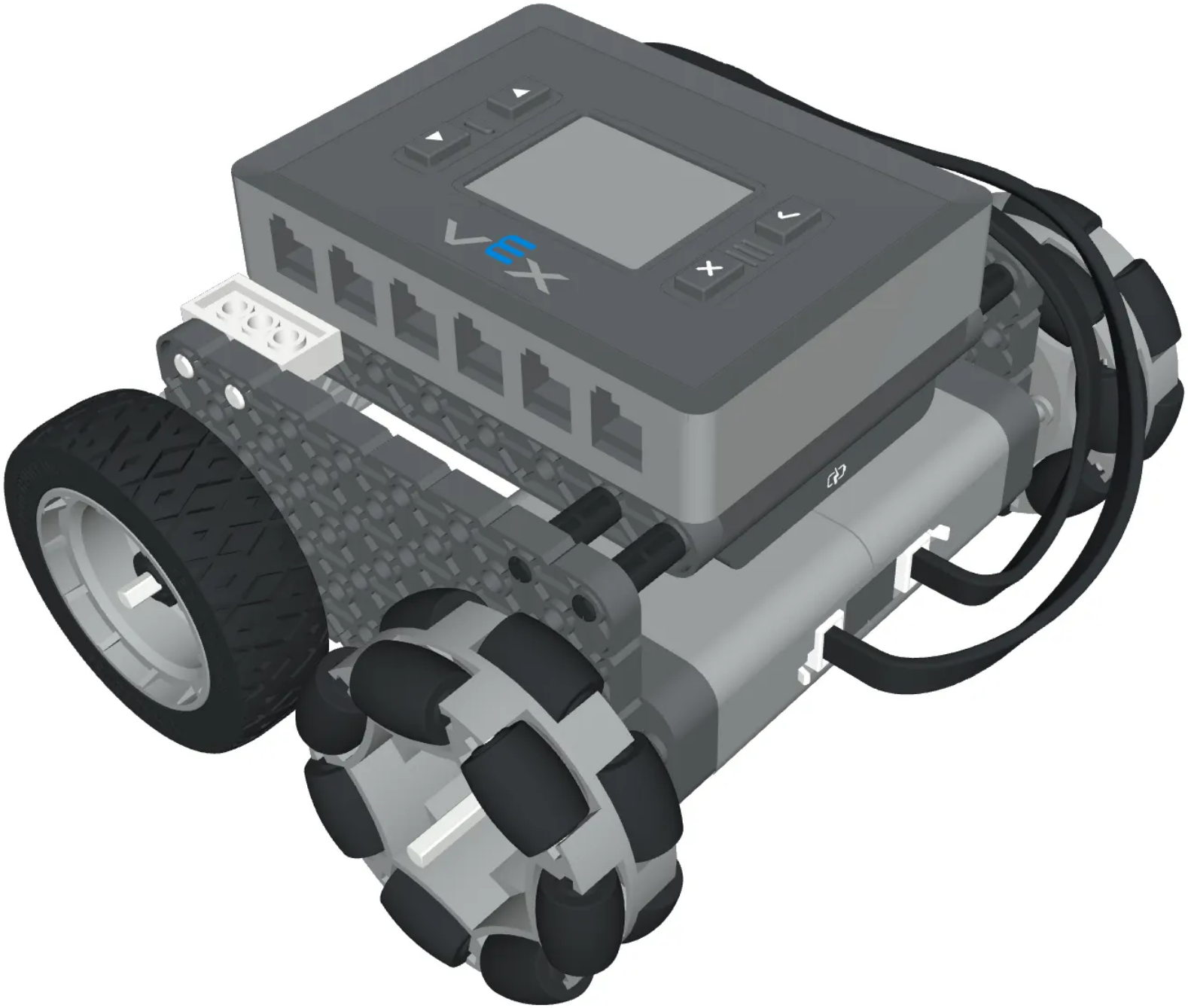
VEX